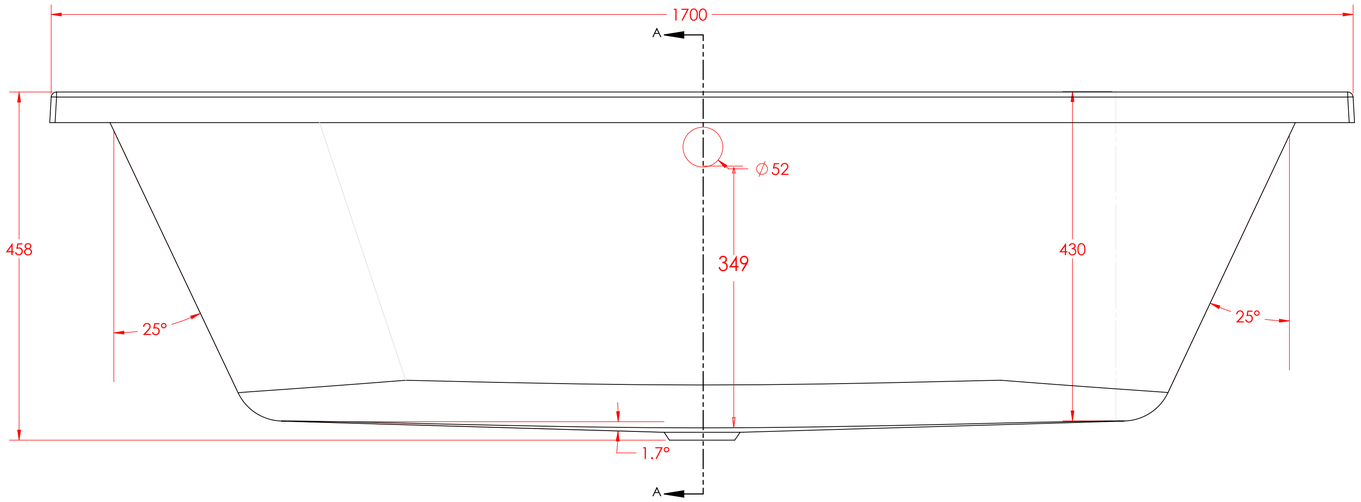

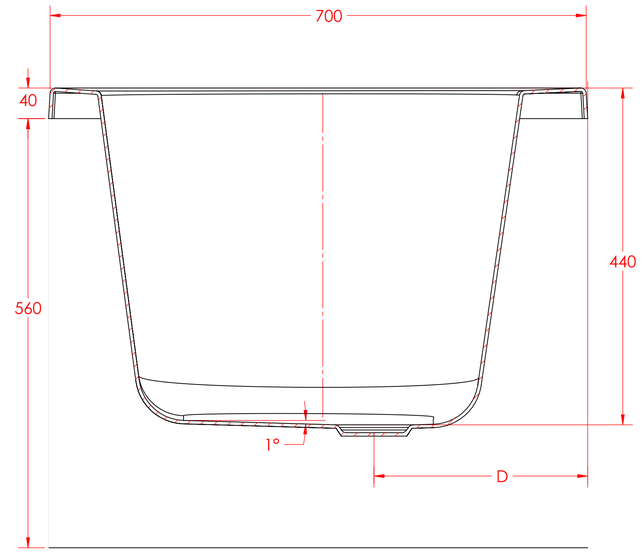

SECTION A-A
SCALE 1 : 4

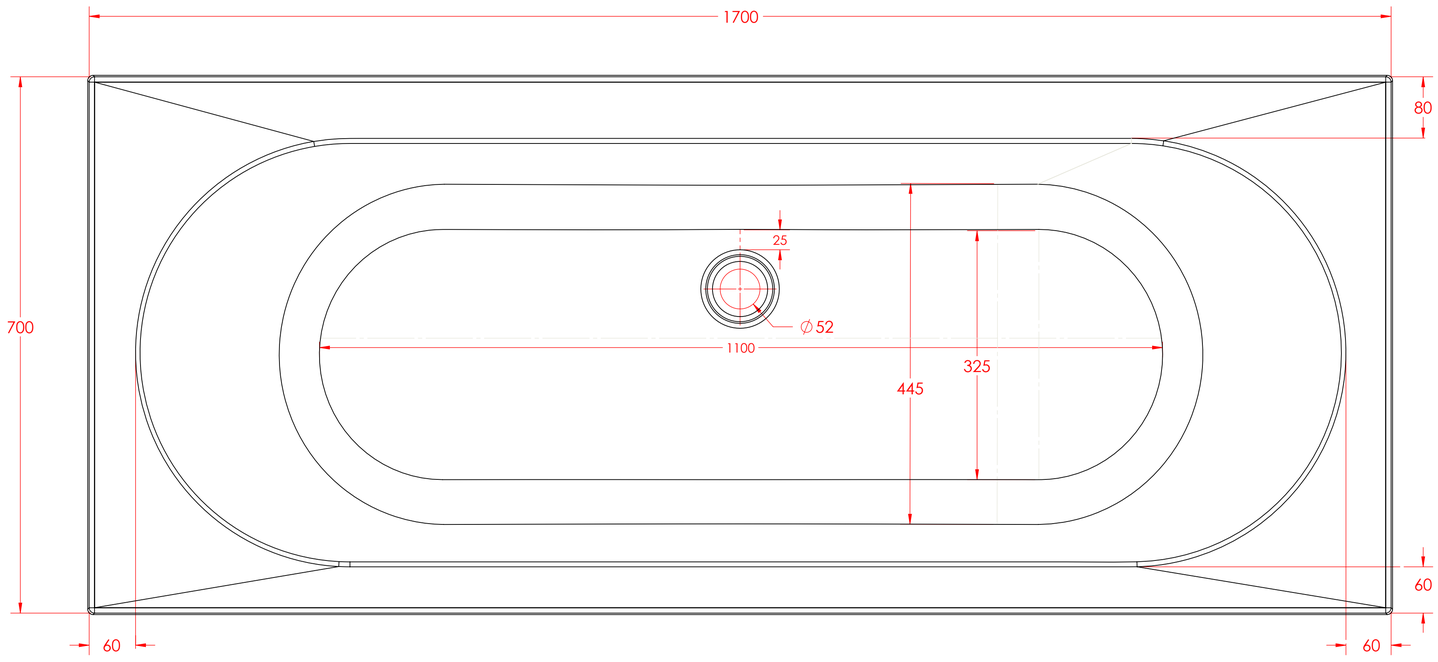

Eastbrook

BISCAY DE SQUARE 1700x700mm