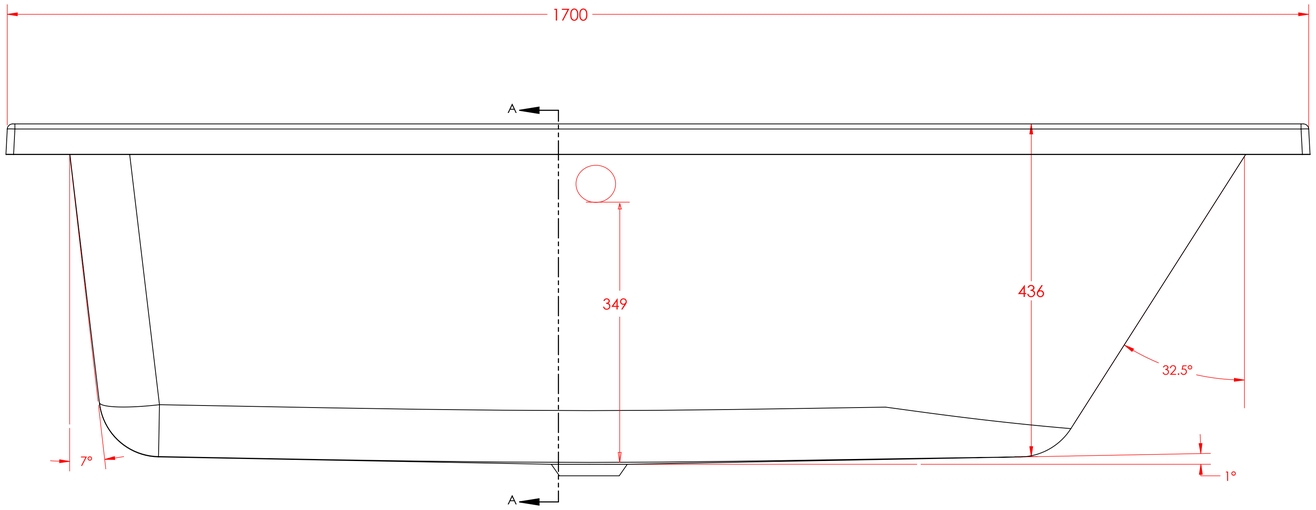


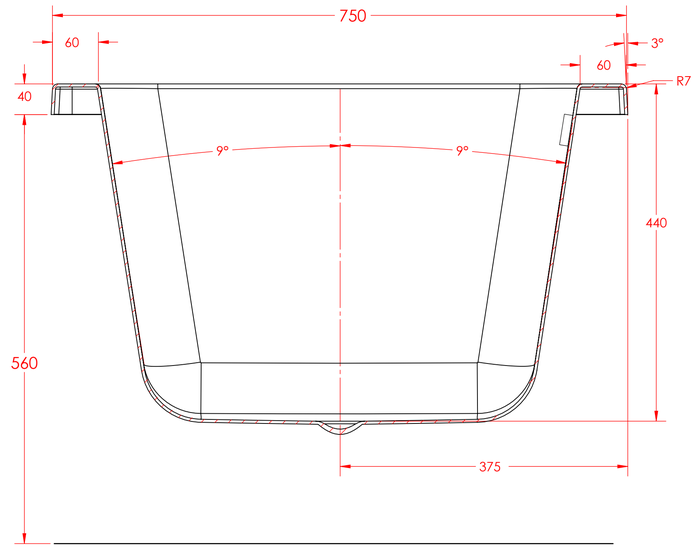


SECTION A-A
SCALE 1 : 4

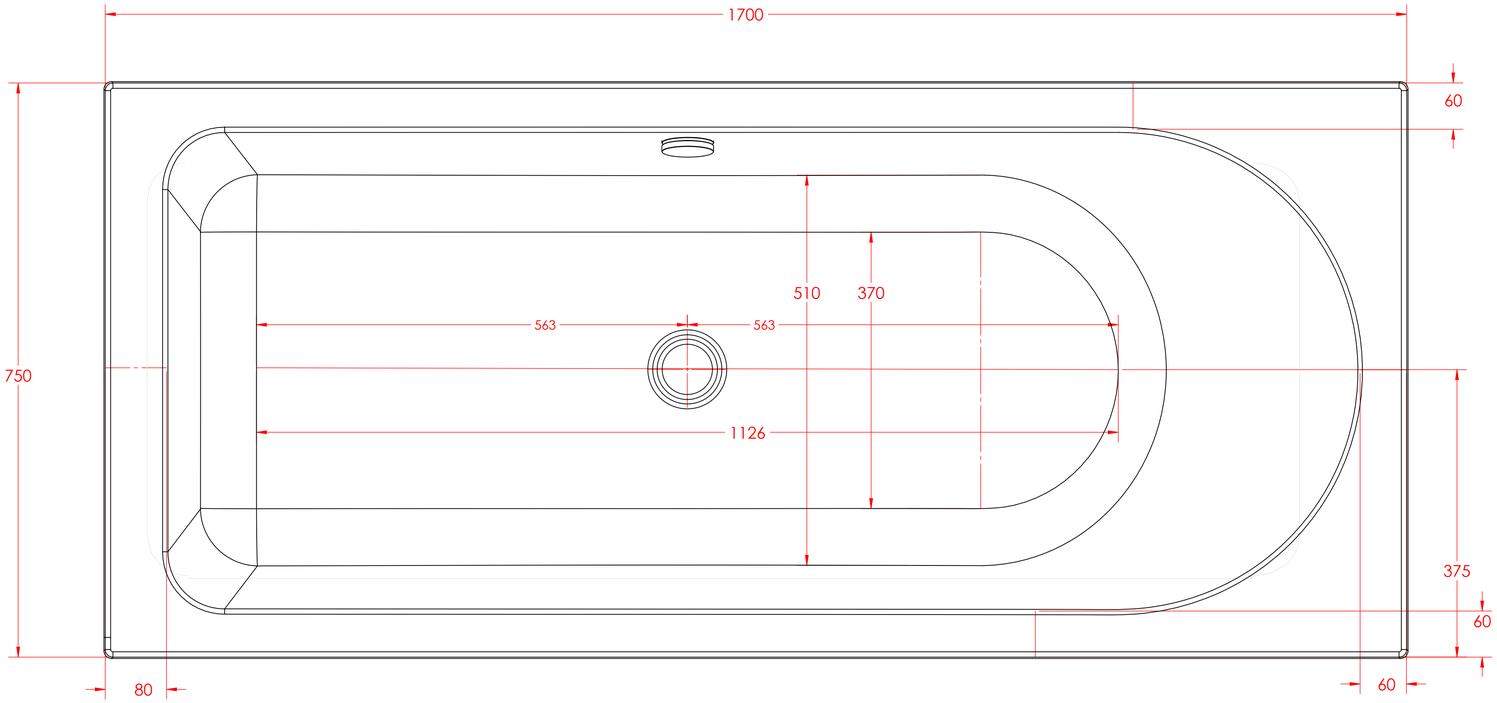


Eastbrook

BISCAY SHOWER RH 1700 x750 x440mm