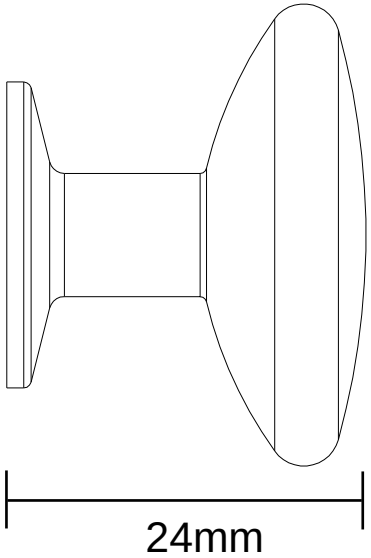
24mm

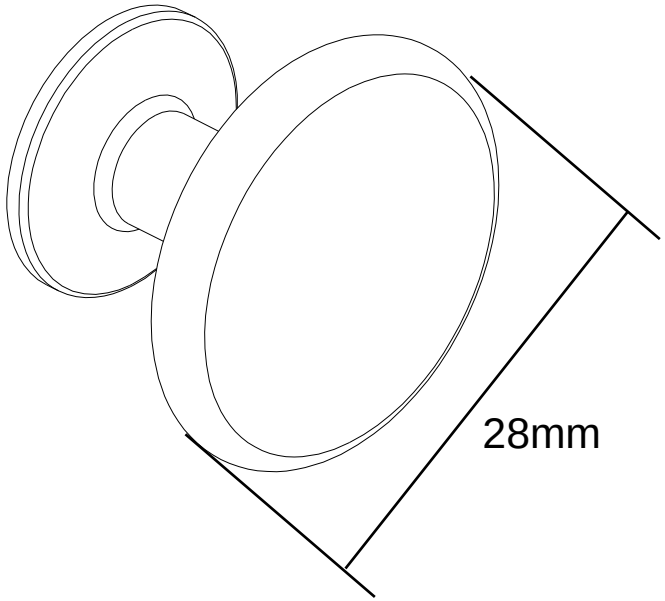
28mm

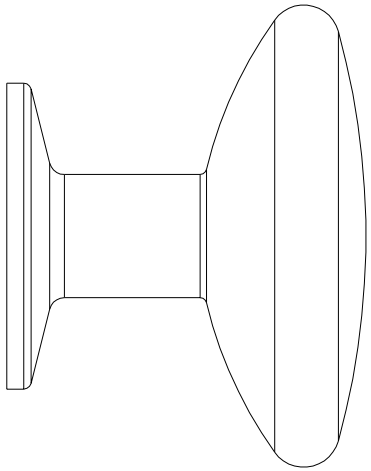

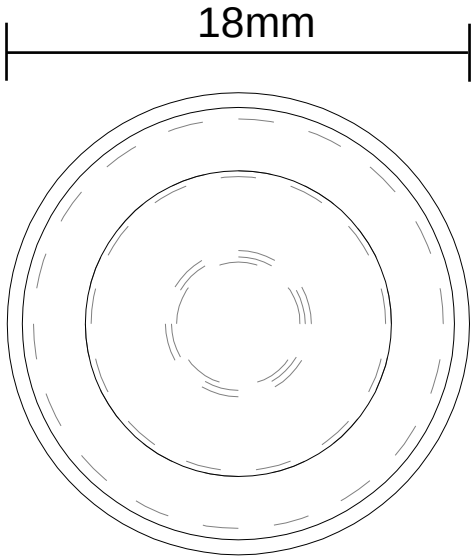
18mm