Rev	Design Change Note	Author	Date
001	First issue	KW	2023-03-21

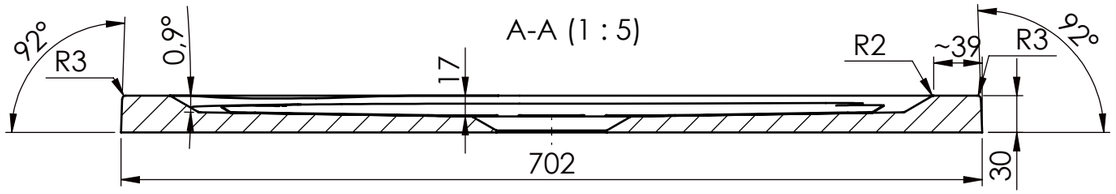

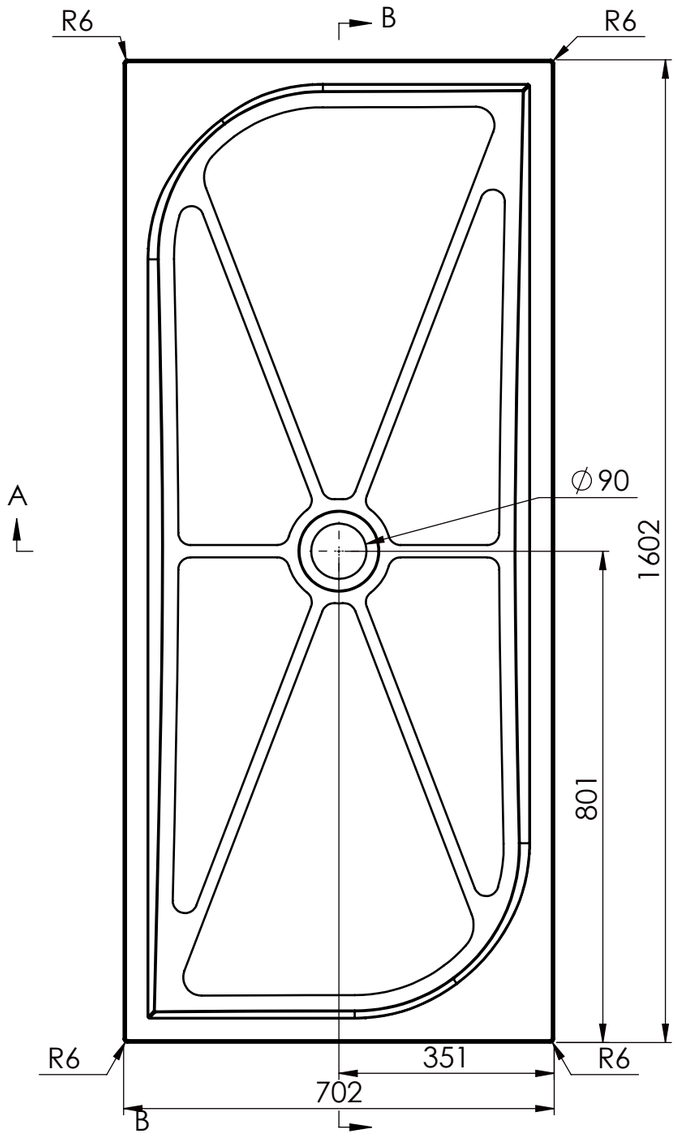

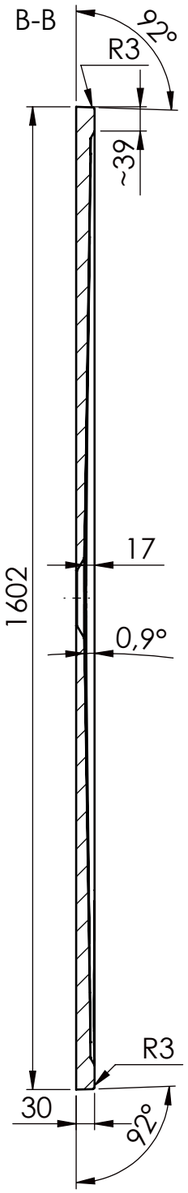

Bottom view

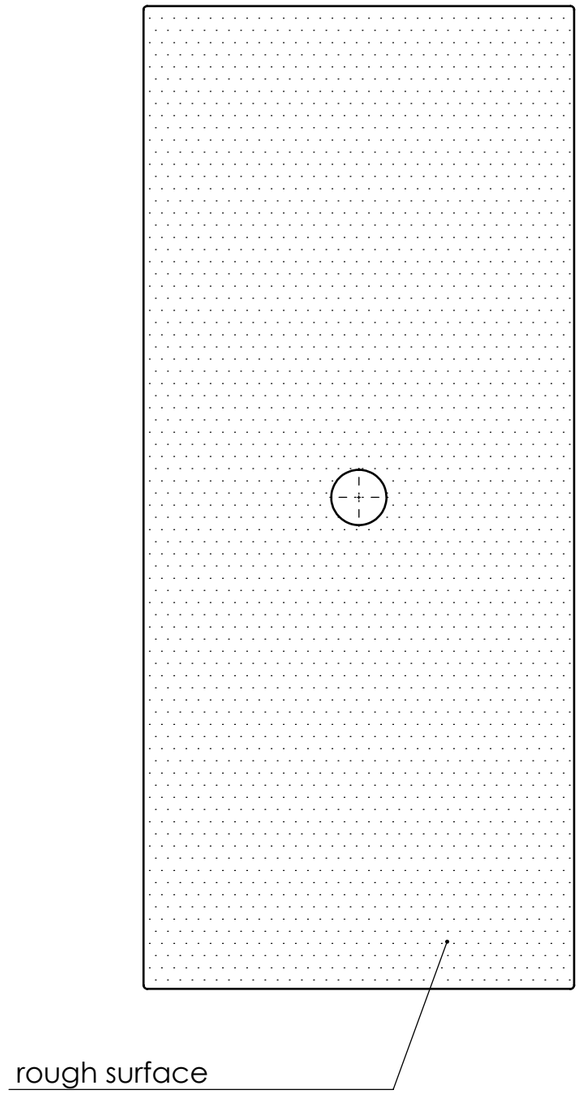

Structure surface

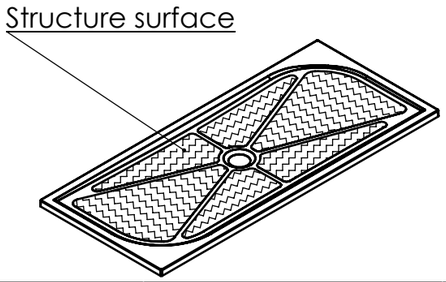

Tolerance length/width		+5/0 mm
Tolerance height		+2/-2 mm
Tolerance plane bending	≤1200 mm	+2/-2 mm
	≥1200 mm	+3/-3 mm
Tolerance thickness		+2/-2 mm
Tolerance feet location		+7/-7 mm
Tolerance holes location		+2/-2 mm
Tolerance holes diameter		+1/-1 mm

Drawn by	Created Date	Checked by
Katarzyna W	2016-05-05	Rafal B
Project status		
Approved	EASTBROOK	

Art. Name: VANGUARD 25 1600x700

Art. No: 6040711630xx

Mould No: FA065163

Material volume[mm³]	Overflow	Taphole	Main dimensions L x W / H [mm]	Drain
23539865.7	NO	0	1602 x 702 / 30	Regular
Surface area[mm²]	Sheet Size	Scale		Current revision
2380038.8	A3	1:10		001