Eastbrook Road, Gloucester GL4 3DB
Technical Helpline: 01452 317890
email: technical@eastbrookco.com

INSTALLATION MANUAL

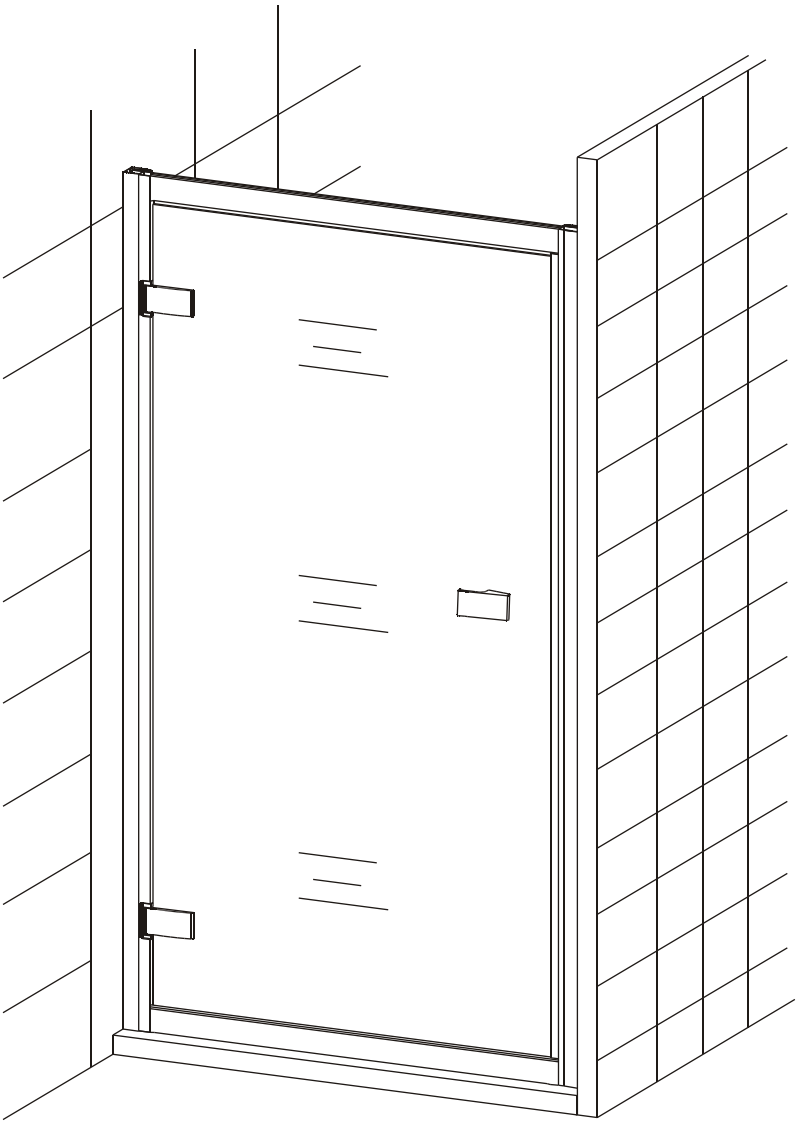

TOOLS REQUIRED

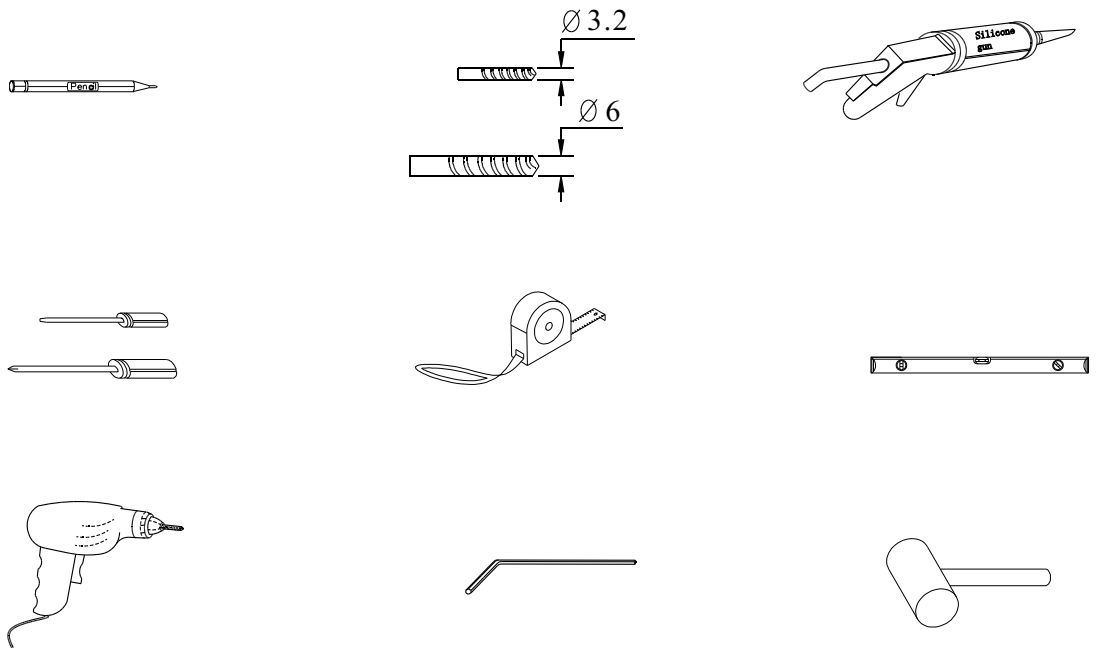

PACKING LIST

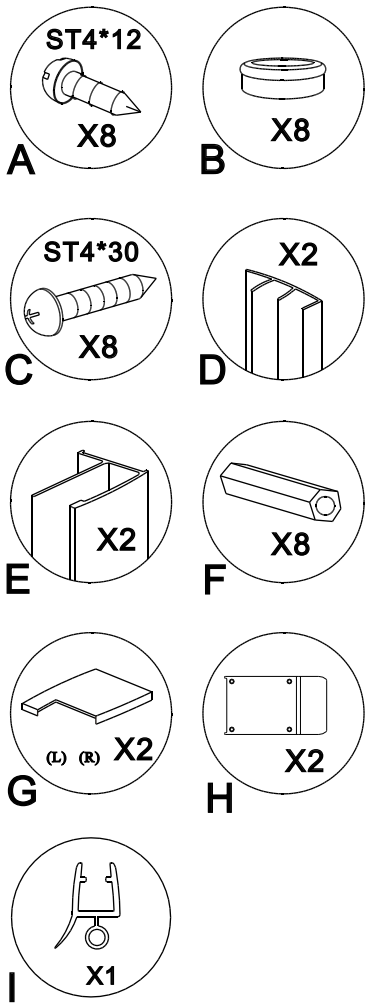

PRODUCT SCHEMATIC DIAGRAM

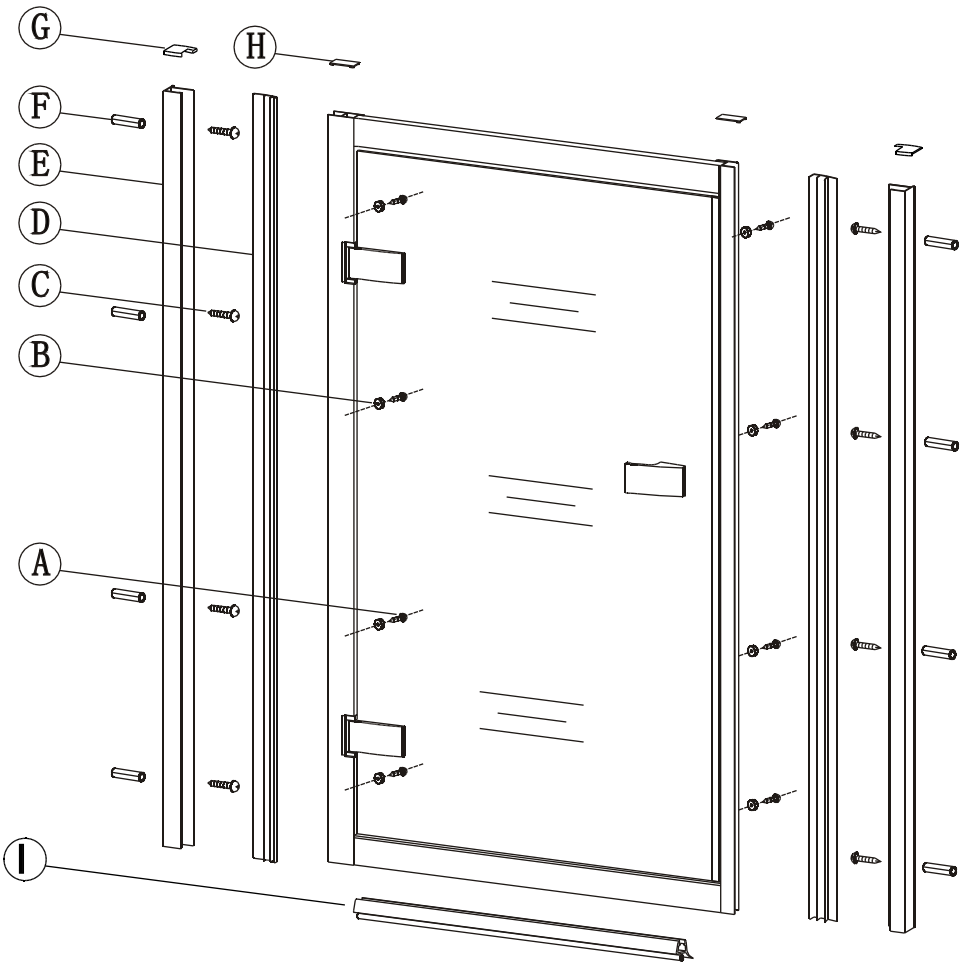

1

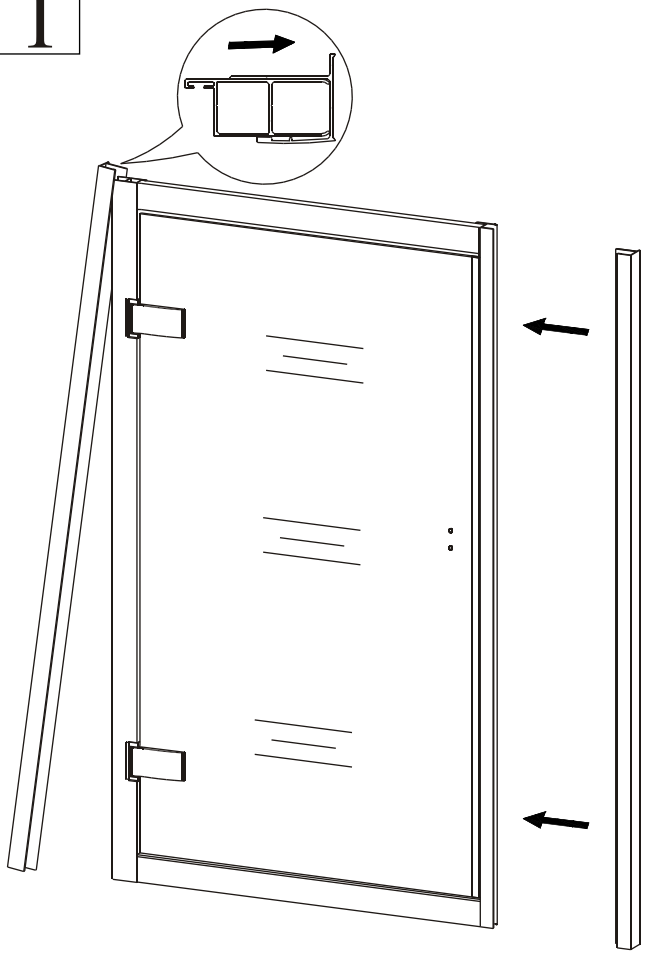

2

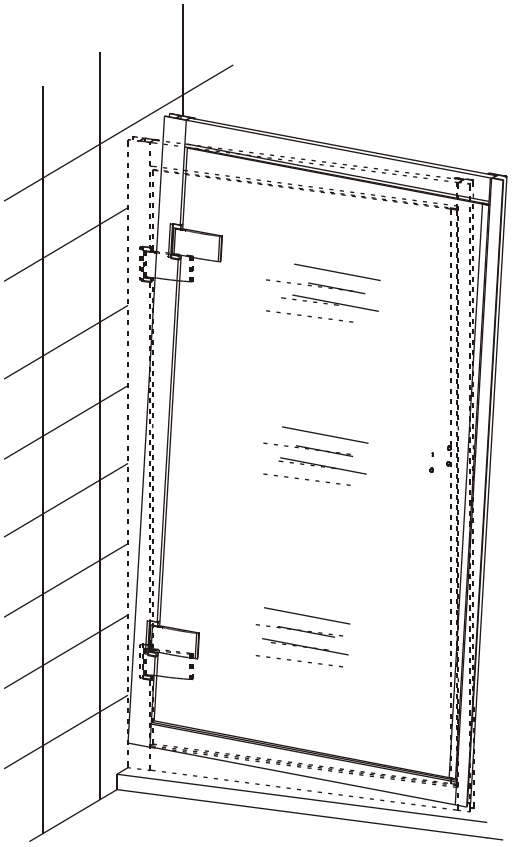

3

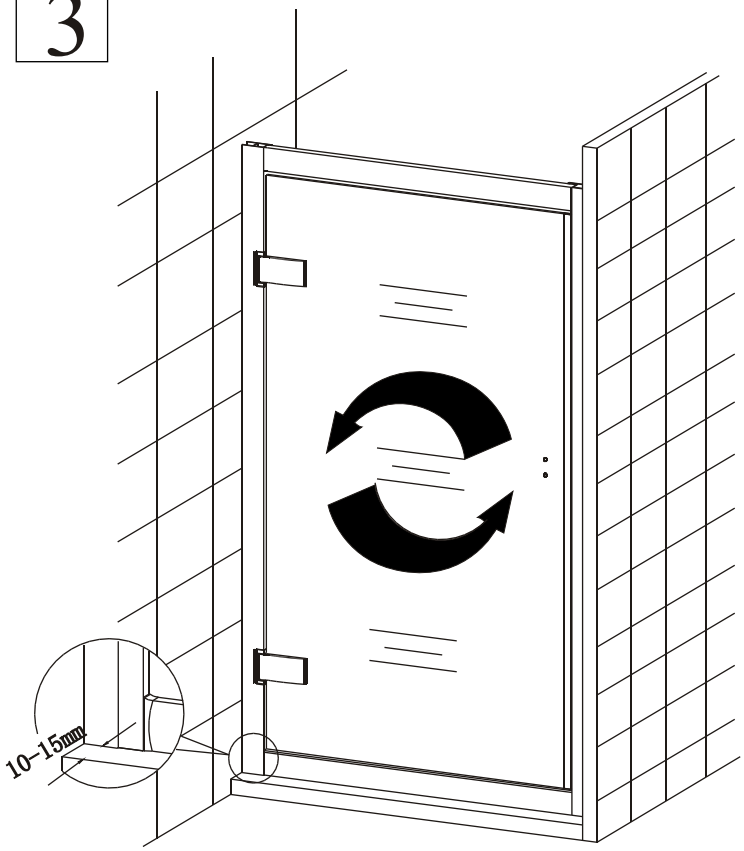

4

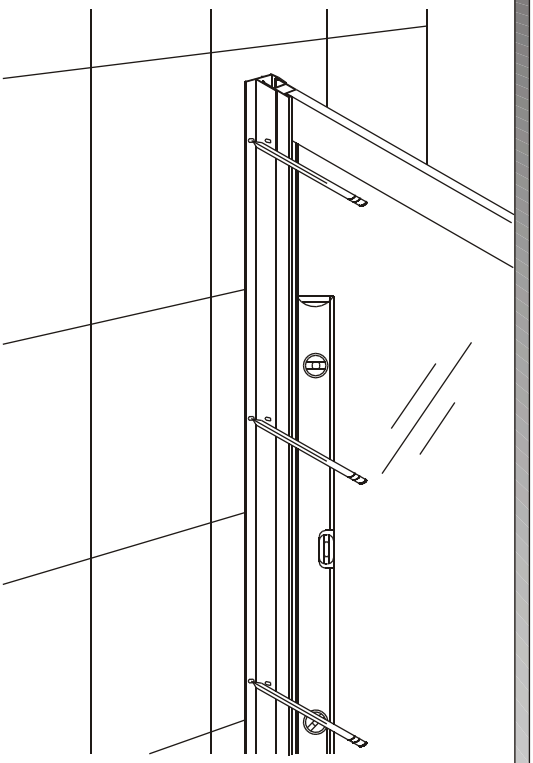

5

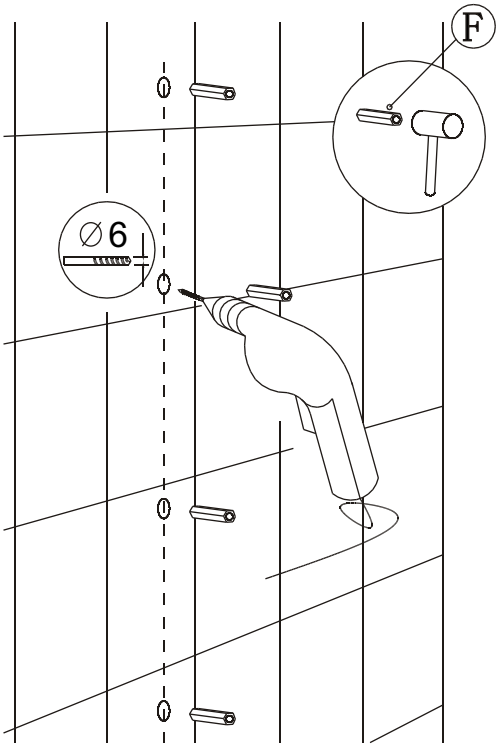

6

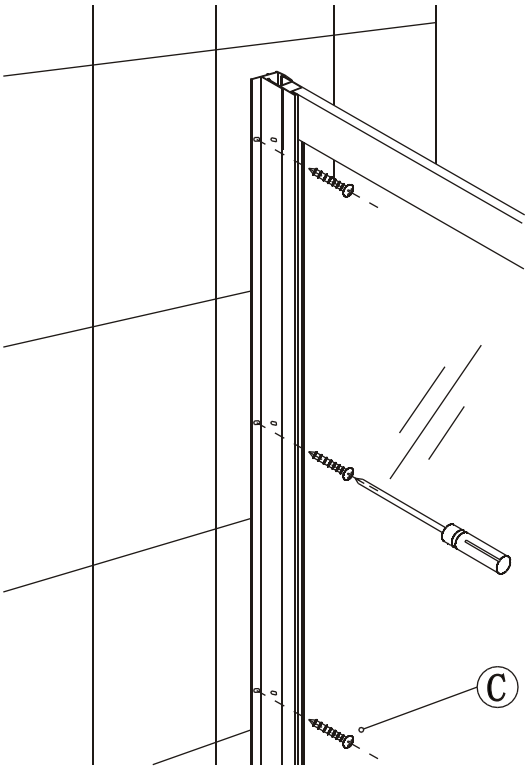

7

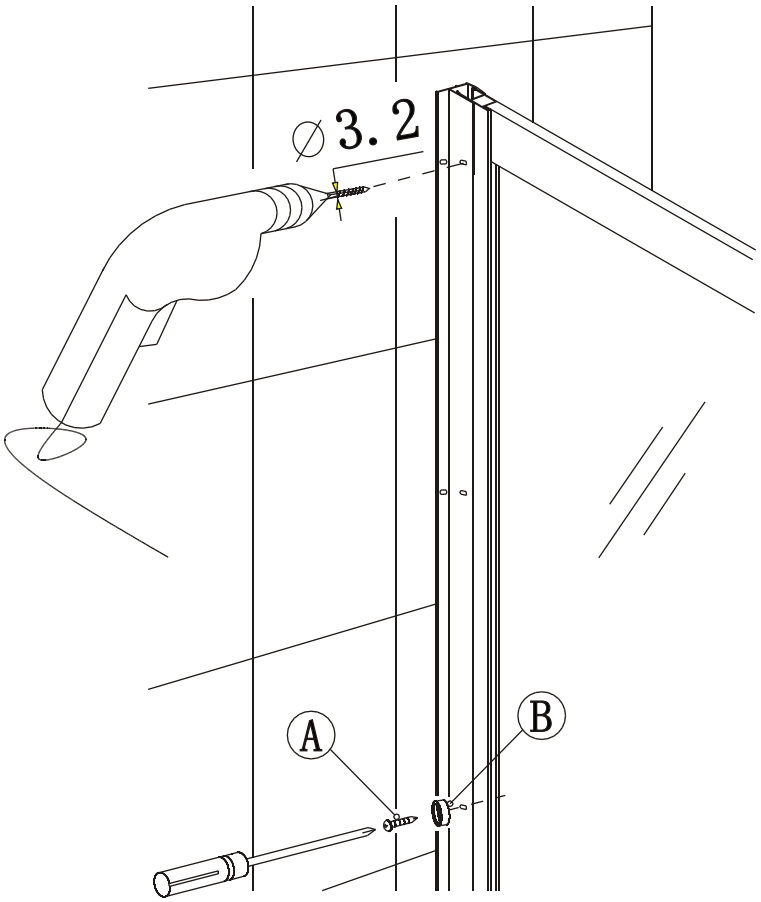

8

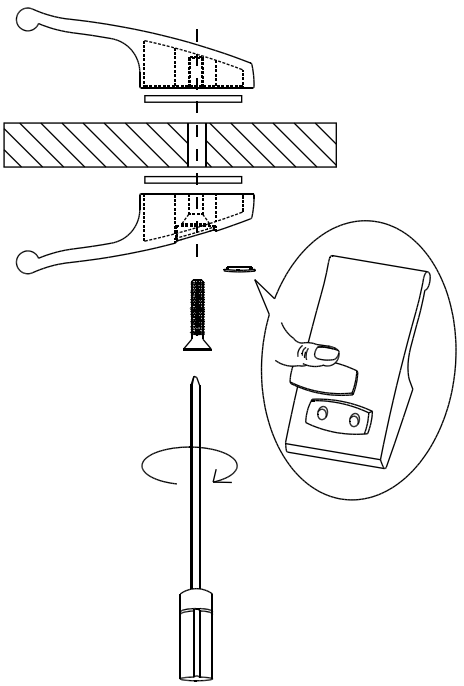

9

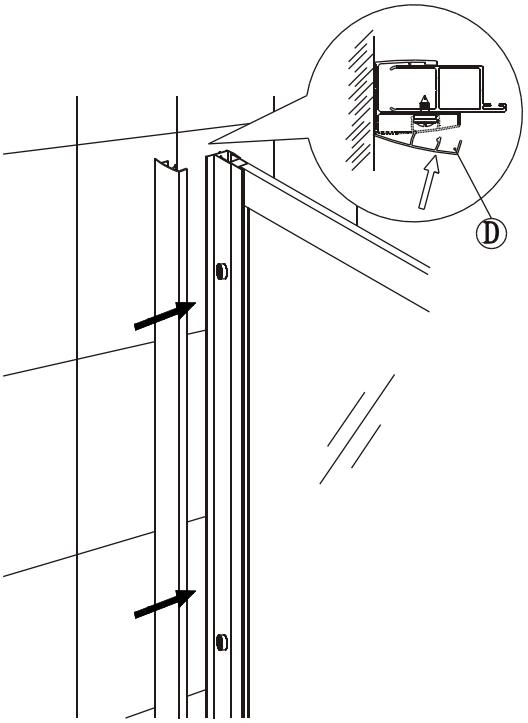

10

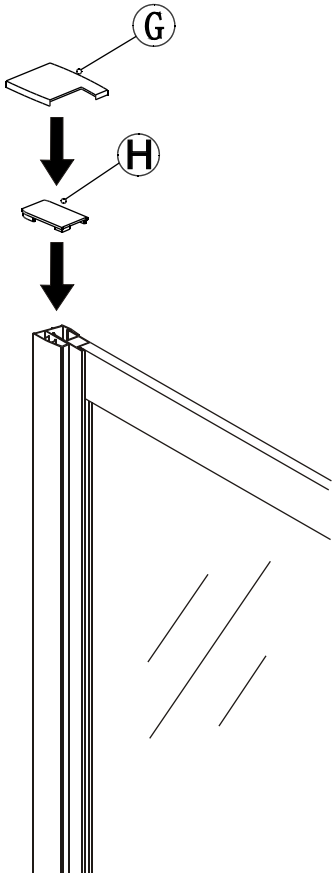

11

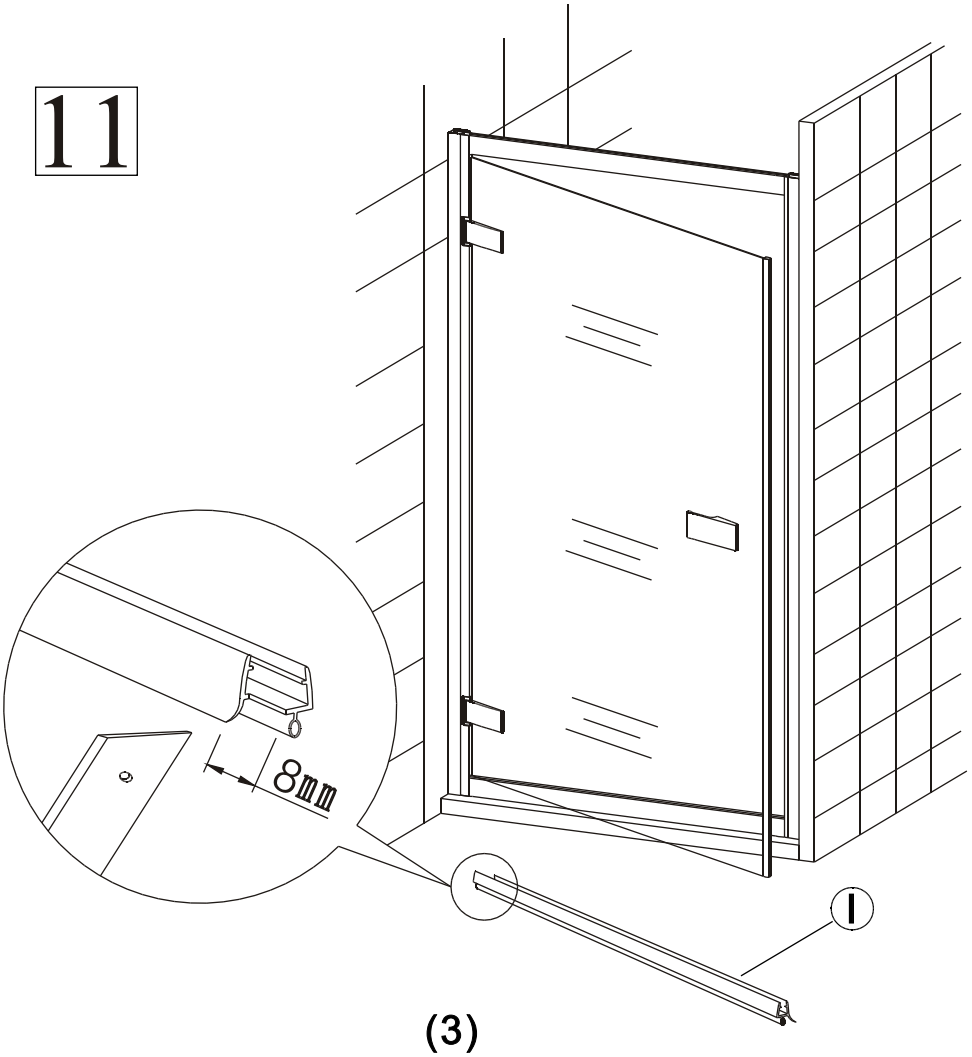

12

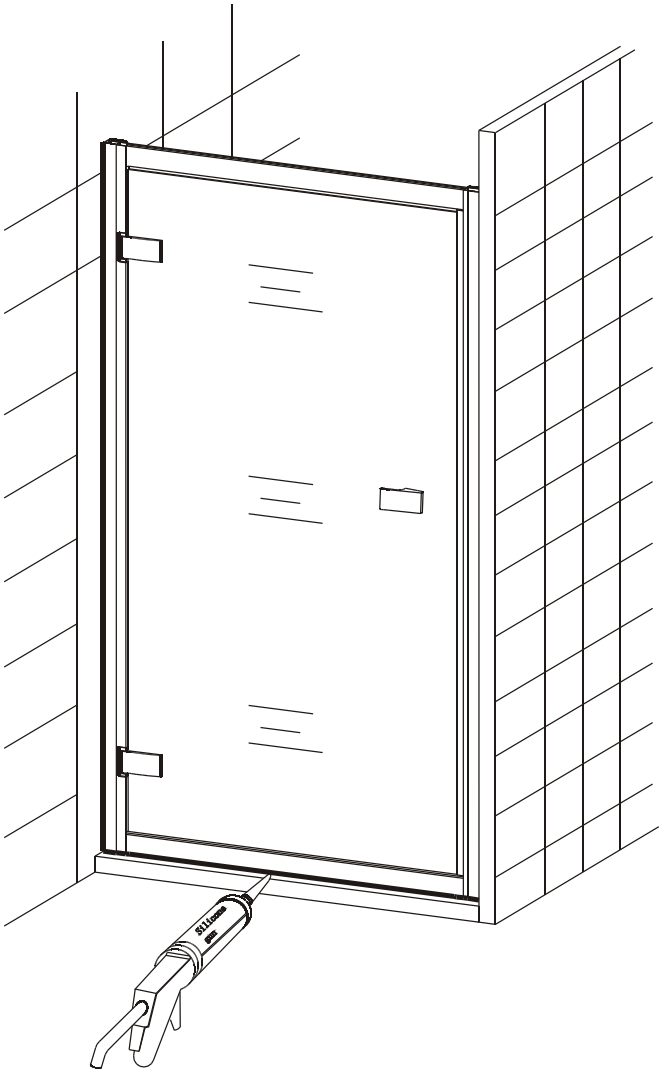

Cleaning & Maintenance

Don't clean the shower enclosure with irritant detergent such as alcohol, bleach or other chemical cleaners.

Only clean with warm soapy water.

After the installation is completed, should you find that there is notable noise when the glass door moves, you may add a small quantity of lubricant onto the roller wheel, slipping hook and the track.

Helpline: 01452 317890

Please ensure silicone sealant is on the outside only.