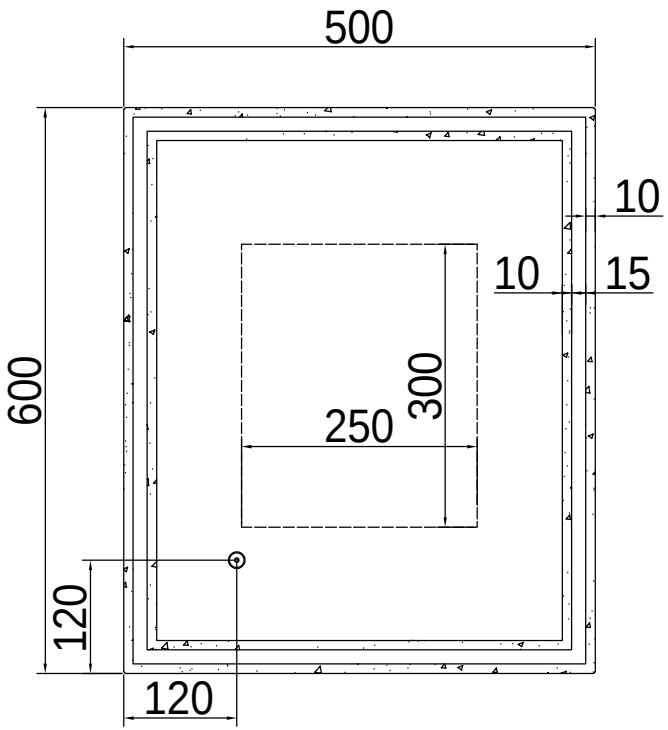

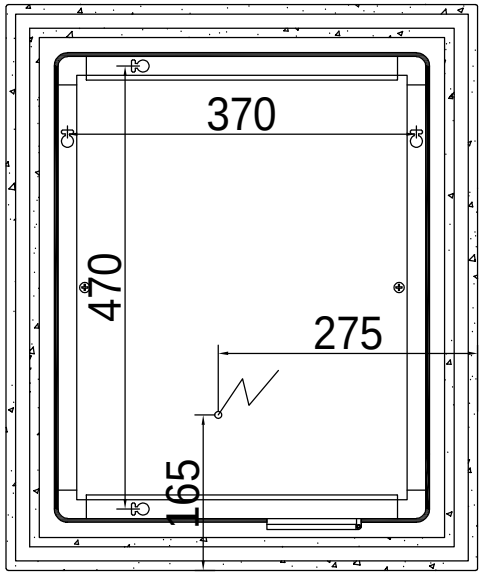

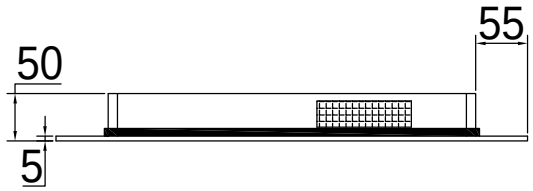

Eastbrook

58.1011 600*500*50