Eastbrook

Eastbrook Road, Gloucester GL4 3DB
Technical Helpline: 01452 317890
email: technical@eastbrookco.com

If you are in doubt installing this product please consult a qualified plumber

General fitting guide for separate pillar taps

Pillar tap body & handles shown will vary depending on model

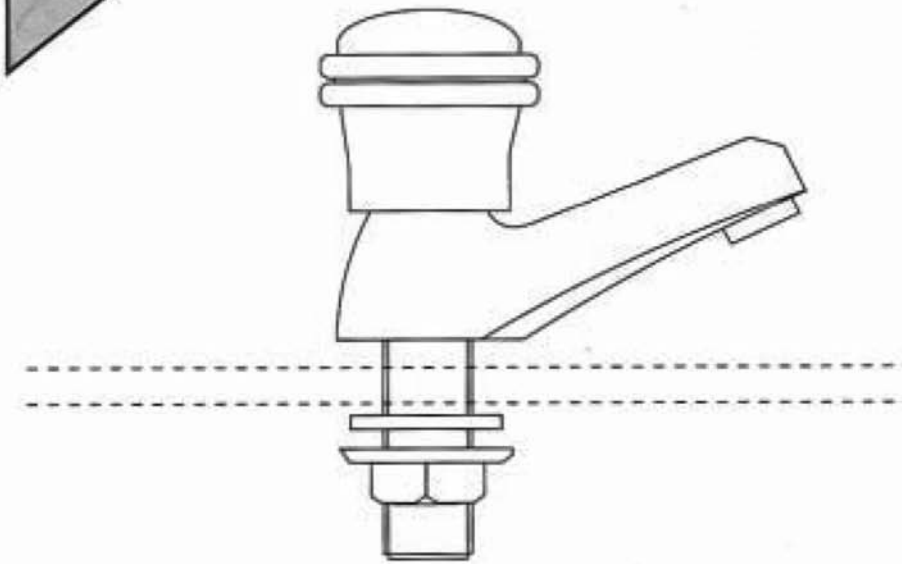

If you are in any doubt installing this product please consult a qualified plumber

INTRODUCTION

This product is suitable for use on water supply pressures between 0.1 bar (1 meter head of water) and 10 bar. At extreme high pressures it may be necessary to reduce the flow rates via the isolating valves. For safety purposes, a pressure reducing valve fitted in the incoming mains supply line may be required.

BS REQUIREMENTS

All fittings are manufactured to conform to BS1010 and/or BS5412 requirements.

WRc REQUIREMENTS

Many of the fittings are sent for testing to the WRc Evaluation and Testing centre and all fittings are manufactured to confirm to WRc requirements.

BYELAW REQUIREMENTS

This product has been manufactured to BS requirements and conforms to all WRc regulations. This ensures compliance with Water Byelaw 16 (3), and Water Byelaw 25 - prevention of "back flow" risk.

GUARANTEE AND AFTERCARE

When installing or using tools, extra care must be taken to avoid damaging the finish or the fitting. To maintain the appearance of this fitting, please ensure it is cleaned regularly using a clean soft damp cloth only. Abrasive cleaners or detergents must not be used as they may cause surface deterioration.

INSTALLATION

Prior to installation please ensure all the supply pipes have been flushed through to remove any debris.

We strongly recommend the fitting of isolating valves to the inlet feeds for ease of future maintenance.
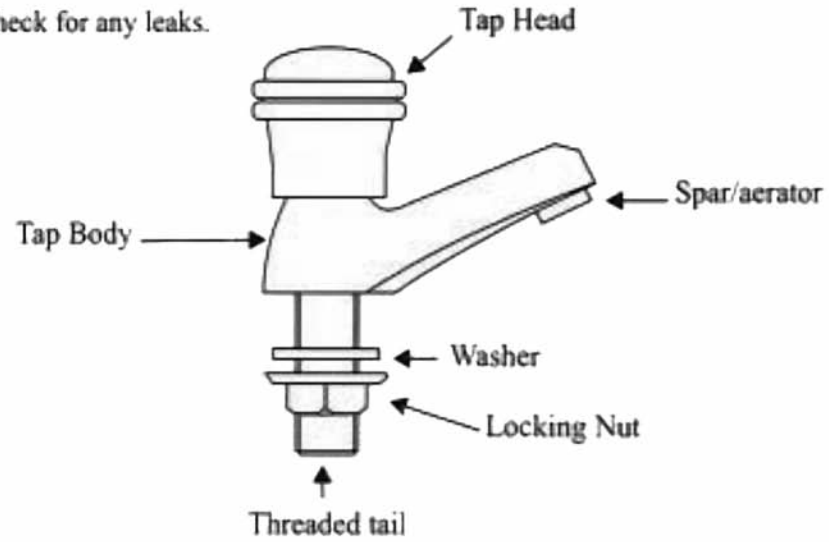
1. Remove old tap fittings.
2. Carefully assemble new fittings onto sanitaryware.
3. Earth any new pipes satisfactorily (seek expert advise if in doubt).
4. Connect water supply to tap tails.
5. Ensure Taps are in 'open' mode.
6. Turn on electric/gas water heater.
7. Turn on water supply and allow taps to run for a few minutes to flush out any debris.
8. Check for any leaks.