Concealed fixing bracket
68.0055

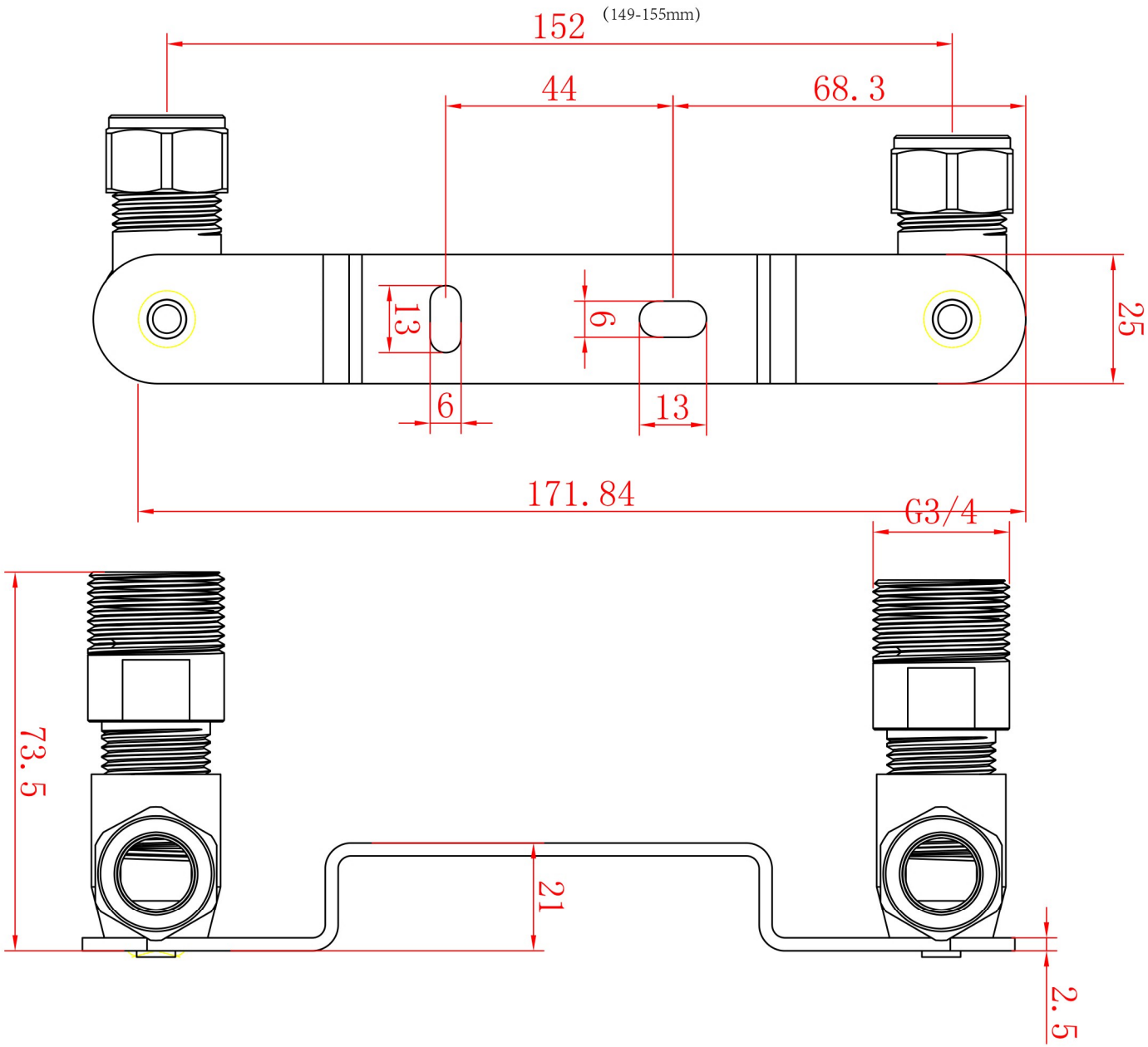

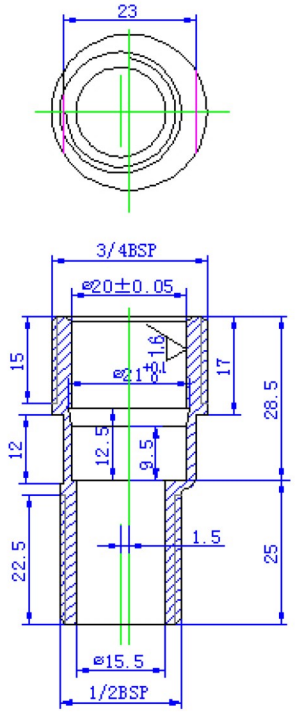

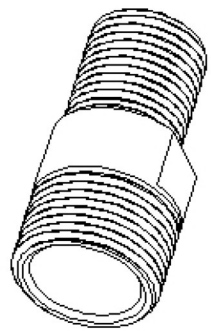

Eastbrook
Eastbrook Road, Gloucester GL4 3DB
Technical Helpline : 01452 317890
Mon - Fri / 8am - 5pm
Email : technical@eastbrookco.com