Biava Round Towel Rail 600 x 400mm.
Technical Drawing

Unit: mm

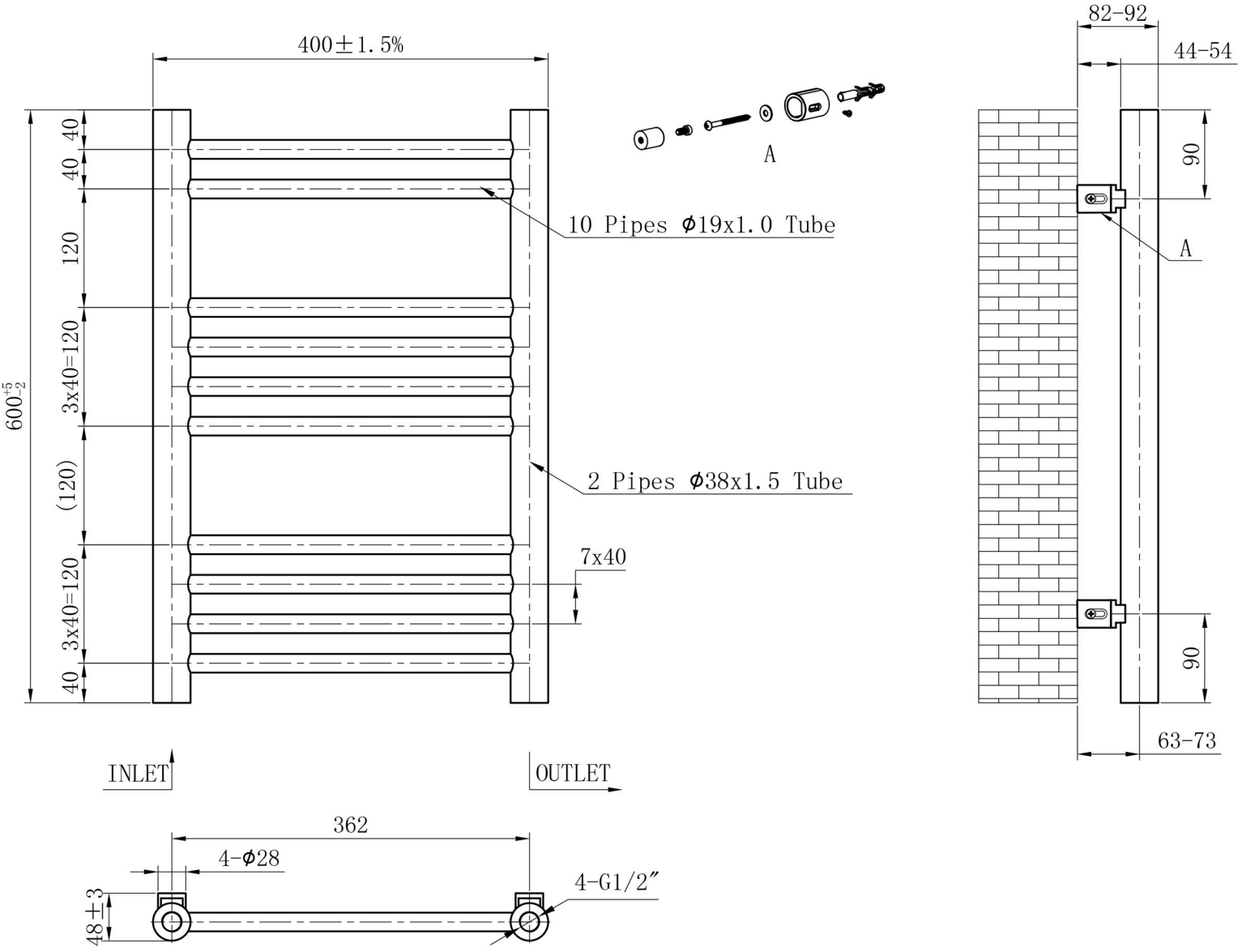

Eastbrook
Eastbrook Road, Gloucester GL4 3DB
Technical Helpline : 01452 317890
Mon - Fri / 8am - 5pm
Email : technical@eastbrookco.com