Eastbrook

Contents of pack:

1 off	White low level pan - 455mm high
1 off	White push button cistern (bottom inlet)
1 off	Push button cistern pack
1 off	White seat (ring only)
1 off	White wall hung basin 450 x 320mm
1 pair	Basin hangers
1 off	Chrome lever action spray mixer tap
1 off	Chrome 40mm flush grated waste
1 off	32mm plastic bottle trap
5 off	600 x 35mm grab rails
1 off	Hinged support rail including toilet roll holder
1 off	Padded back rest support

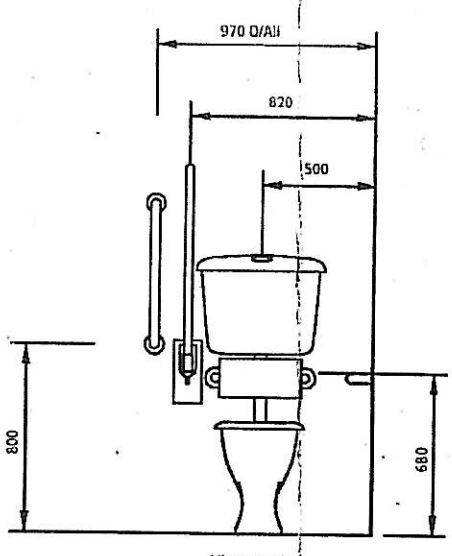

View on B-B

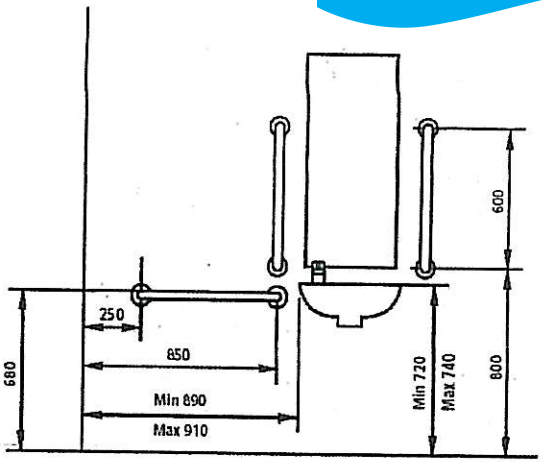

View on A-A

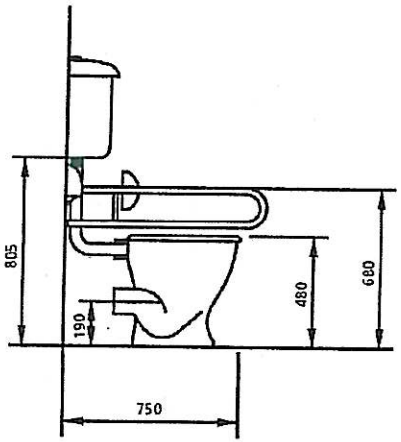

View on C-C

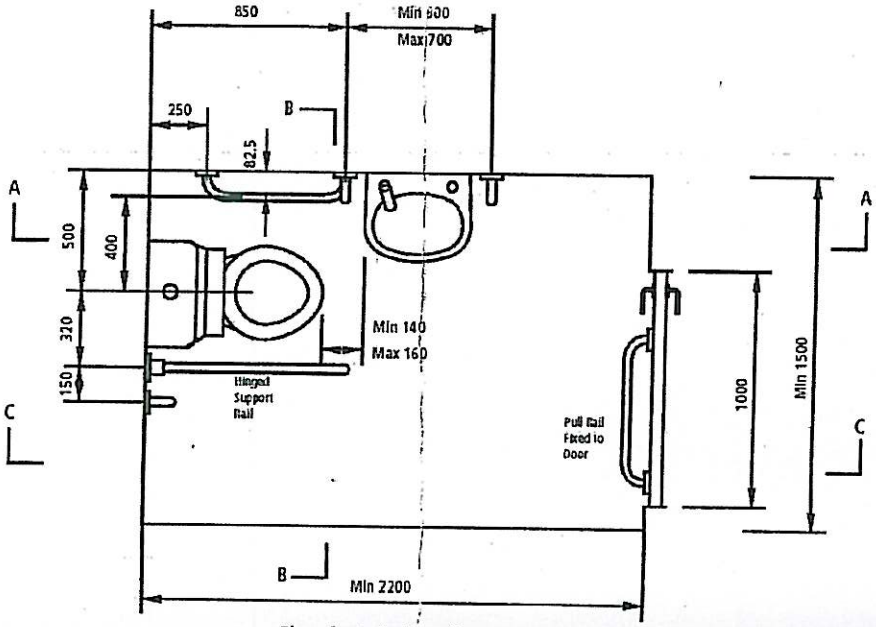

Plan of a typical installation

Doc M Push Button L/L