Code No.: 33.0002
Dimensions: 1660x730x570 mm

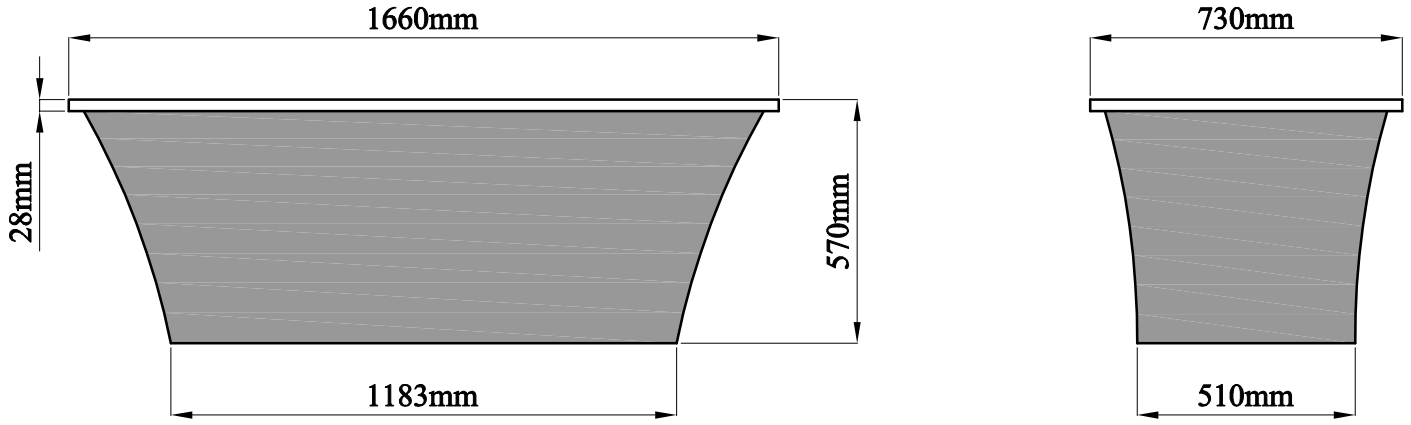

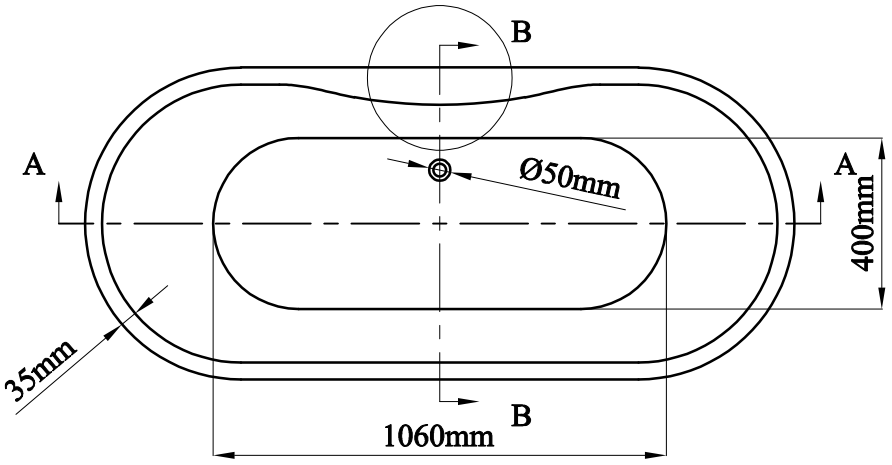

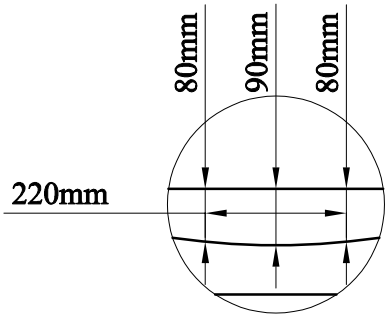

SECTION A-A

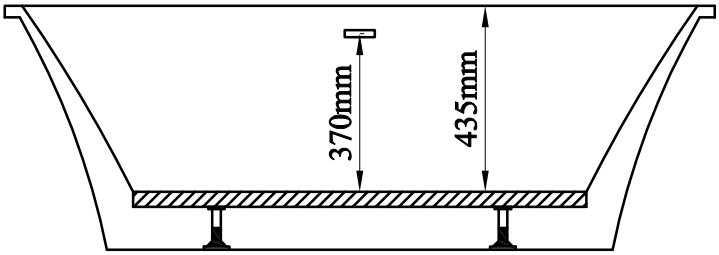
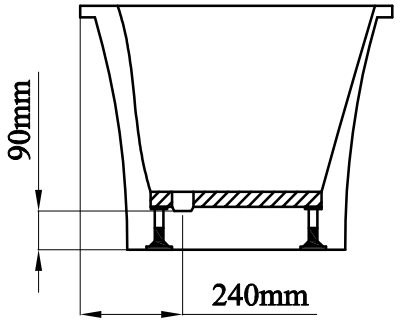
SECTION B-B