Eastbrook Road
Gloucester, GL4 3DB
01452 317800
www.eastbrooktrade.com

Eastbrook

DATASHEET

Image

Drawing

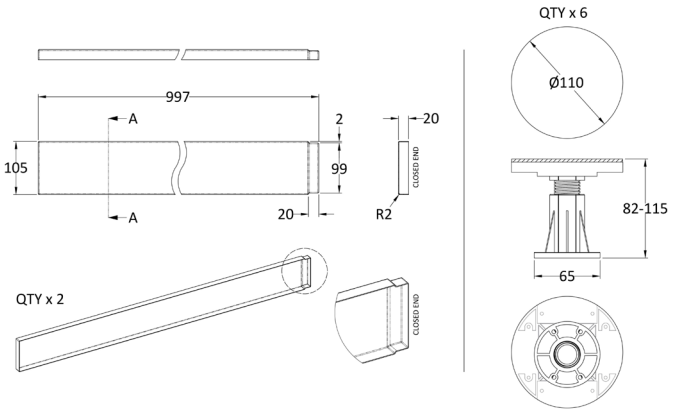

General Information

Product:	48.1061
Description:	Vantage legs & panel for 700-900 square & rectangle trays
Website Link:	(Click Here)
Product Type:	Legs & Panels
Brand:	Eastbrook Company
Colour:	White
Height (mm):	105mm
Width (mm):	997mm
Length (mm):	20mm
Net Weight (kg) (kg):	1.2kg
Product Range:	Vantage

Product Specifications

Waste Included:	No