Eastbrook Road
Gloucester, GL4 3DB
01452 317800
www.eastbrooktrade.com

Eastbrook

DATASHEET

Image

General Information

Product:	68.0061
Description:	Nostalgic Single Lever Manual MP Shower Valve
Website Link:	(Click Here)
Product Type:	Shower Valve
Brand:	Eastbrook Company
Colour:	White
Material:	Brass valve body
Height (mm):	129mm
Width (mm):	155mm
Length (mm):	124.5mm
Net Weight (kg):	1.55kg

Product Specifications

Warranty:	5 Year(s)
Finish:	Polished
Waste Included:	No
Supplied with fixings:	Yes
Mounting:	Wall
Flow rate Litres/Min (1.0 bar):	20.5
Flow rate Litres/Min (2.0 bar):	23.54
Flow rate Litres/Min (3.0 bar):	25.4
Minimum Bar Pressure re-	0.5

Eastbrook Road
Gloucester, GL4 3DB
01452 317800
www.eastbrooktrade.com

Eastbrook
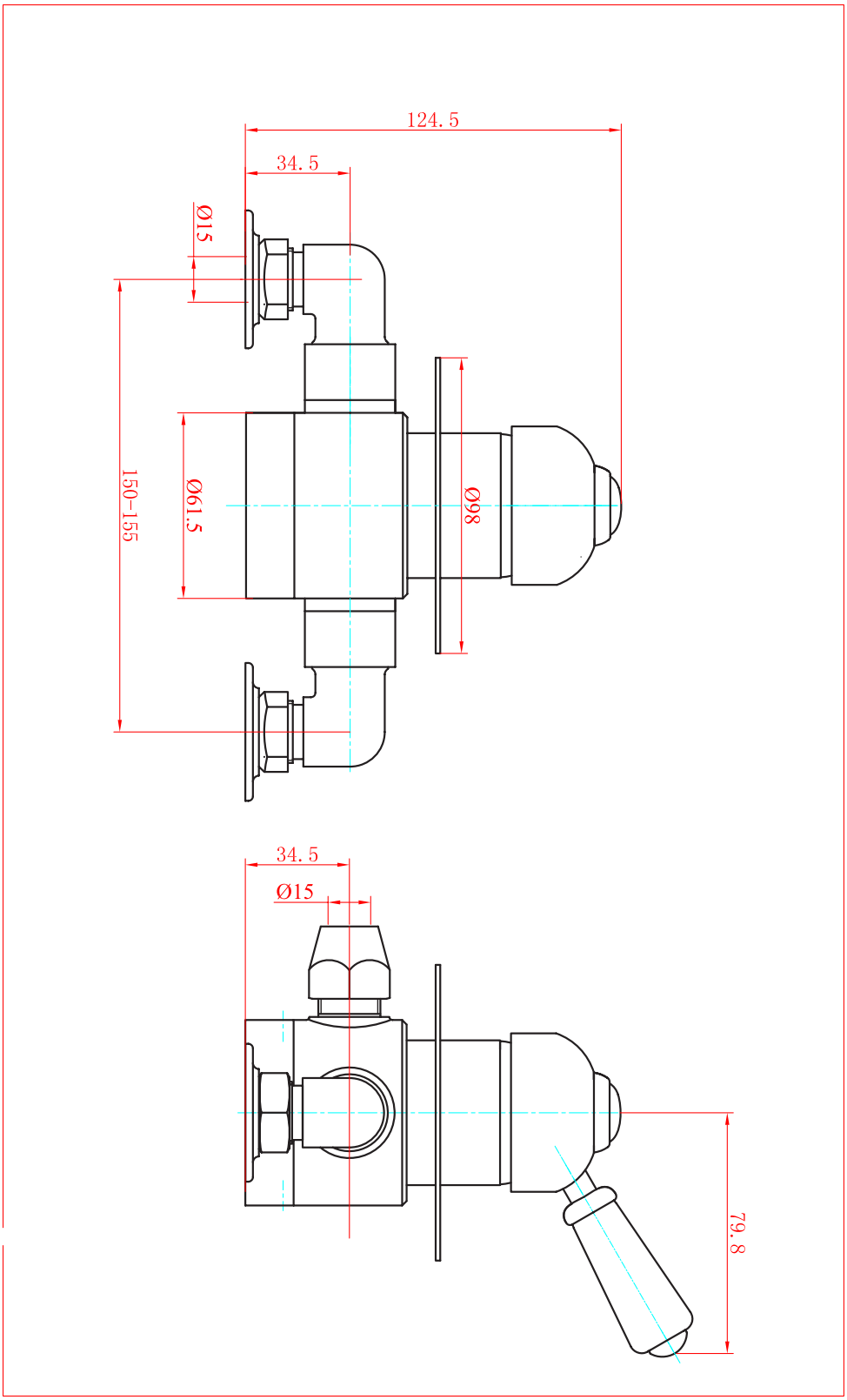
Drawing