Eastbrook
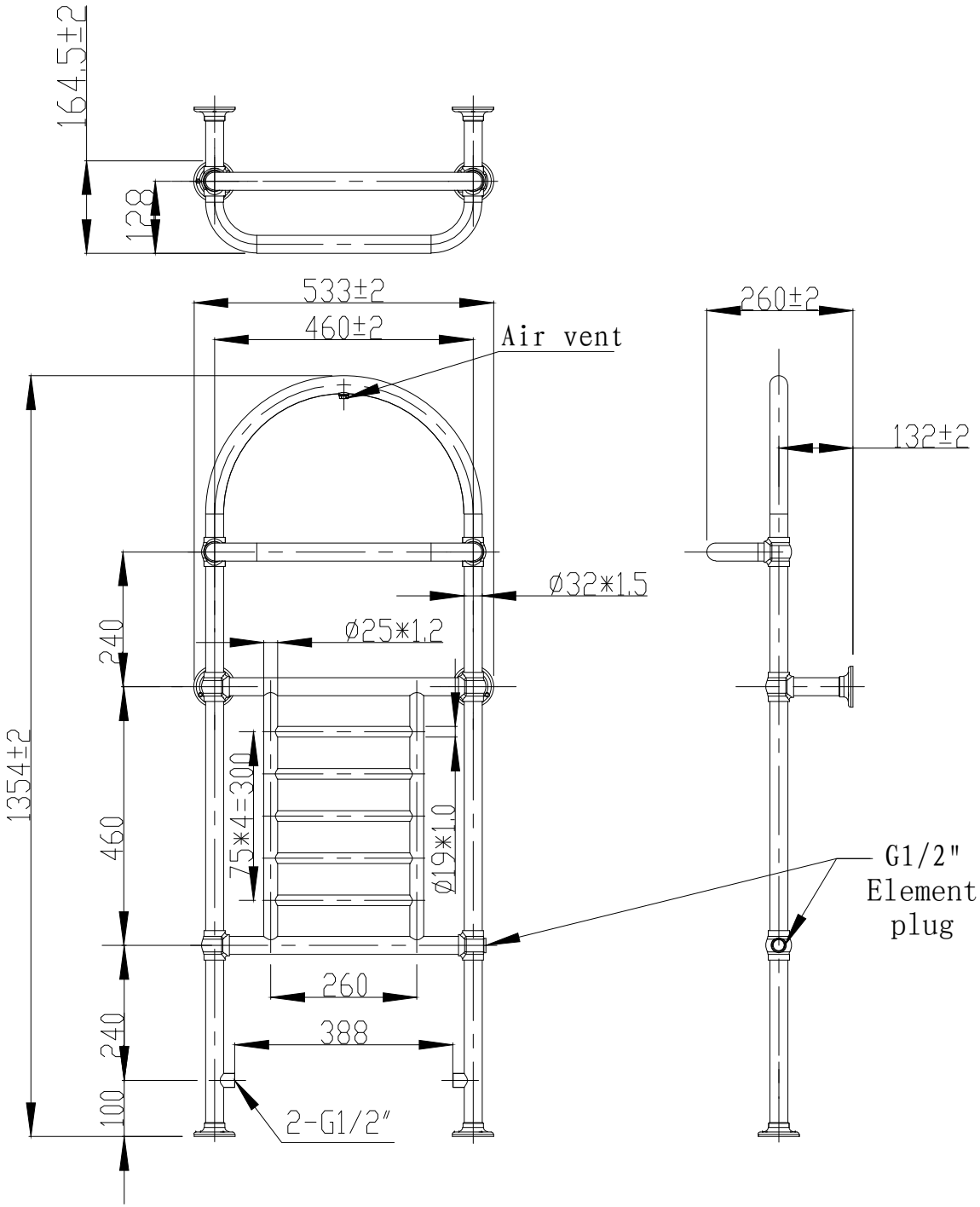
Eastbrook Road, Gloucester GL4 3DB
Technical Helpline: 01452 317890
email: technical@eastbrookco.com