Eastbrook Road
Gloucester, GL4 3DB
01452 317800
www.eastbrooktrade.com

DATASHEET

Image

General Information

Product:	93.0105
Description:	Square Outlet Elbow with Shower Holder SmoothBlack
Website Link:	(Click Here)
Product Type:	Outlet Elbow
Brand:	Eastbrook Company
Colour:	Smooth Black
Height (mm):	50mm
Width (mm):	50mm
Length (mm):	106mm
Net Weight (kg) (kg):	0.39kg

Product Specifications

Finish:	Matt
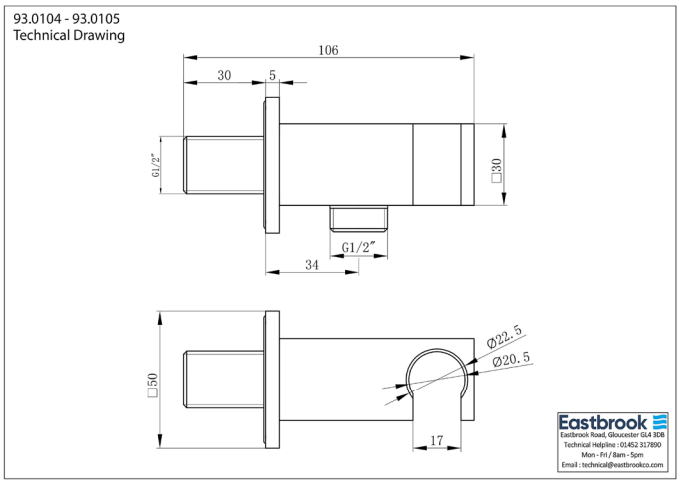
Drawing