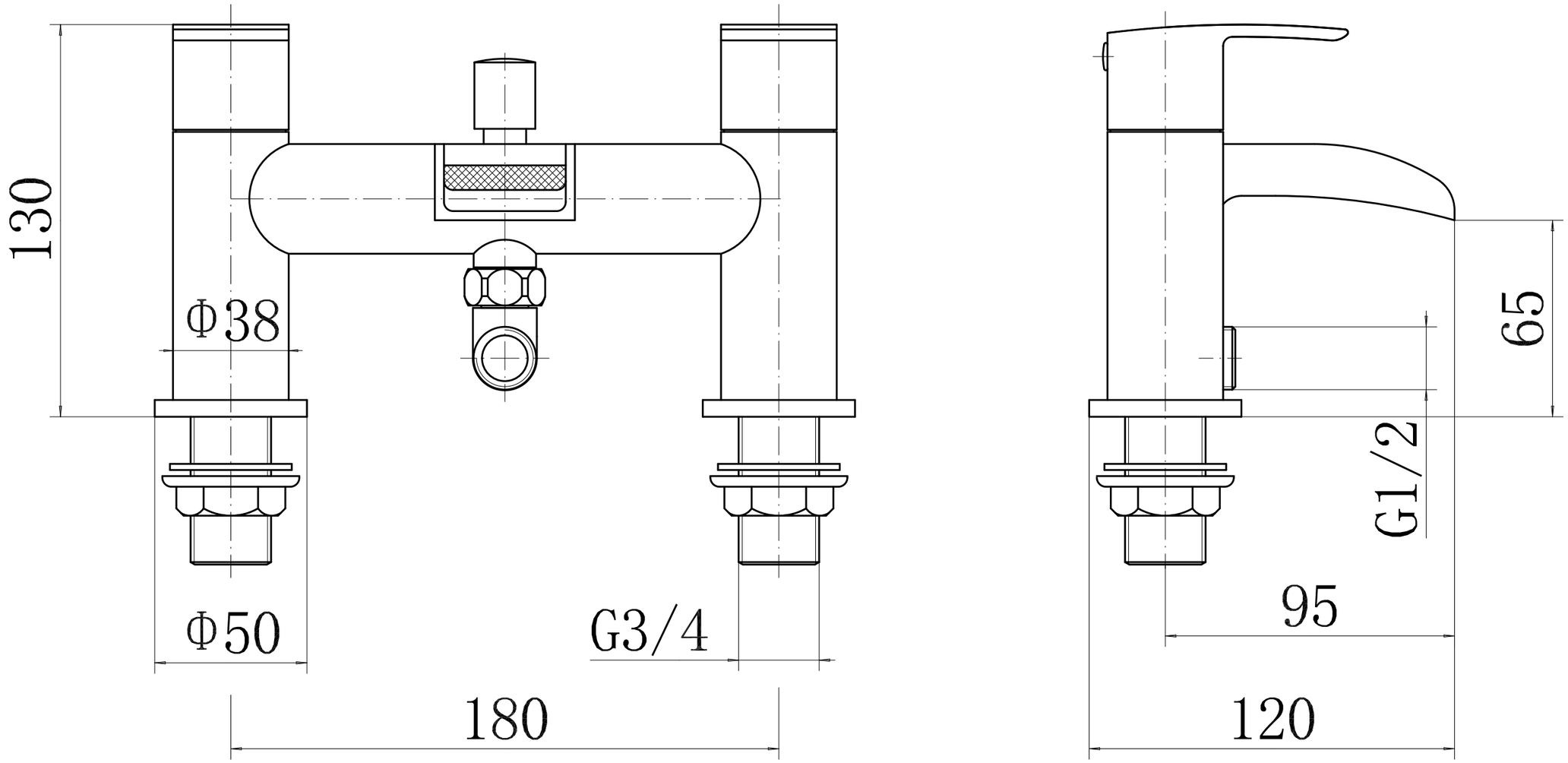
130
Φ38
Φ50
G3/4
180
65
G1/2
95
120