Eastbrook Road
Gloucester, GL4 3DB
01452 317800
www.eastbrooktrade.com

Eastbrook

DATASHEET

Image

General Information

Product:	98.1006
Description:	Bath Pop up Waste & Overflow
Website Link:	(Click Here)
Product Type:	Bath Waste
Brand:	Eastbrook Company
Colour:	Matt Anthracite
Net Weight (kg):	0.7kg

Product Specifications

Number of grips Supported:	0

Eastbrook Road
Gloucester, GL4 3DB
01452 317800
www.eastbrooktrade.com

Eastbrook
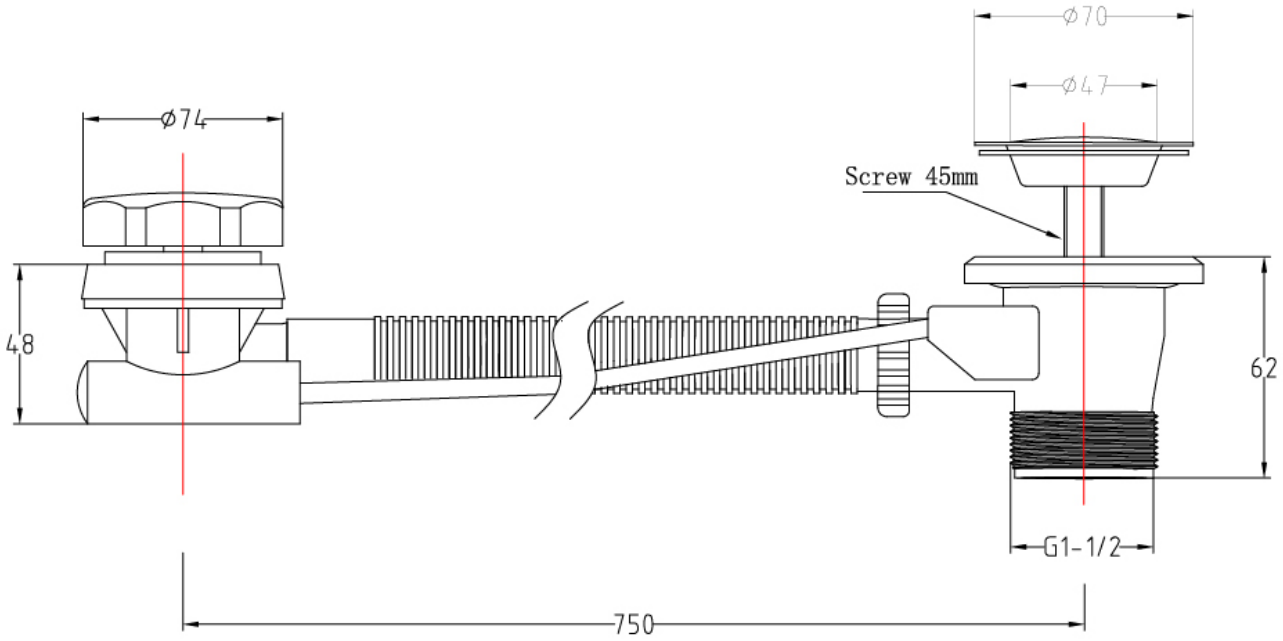
Drawing