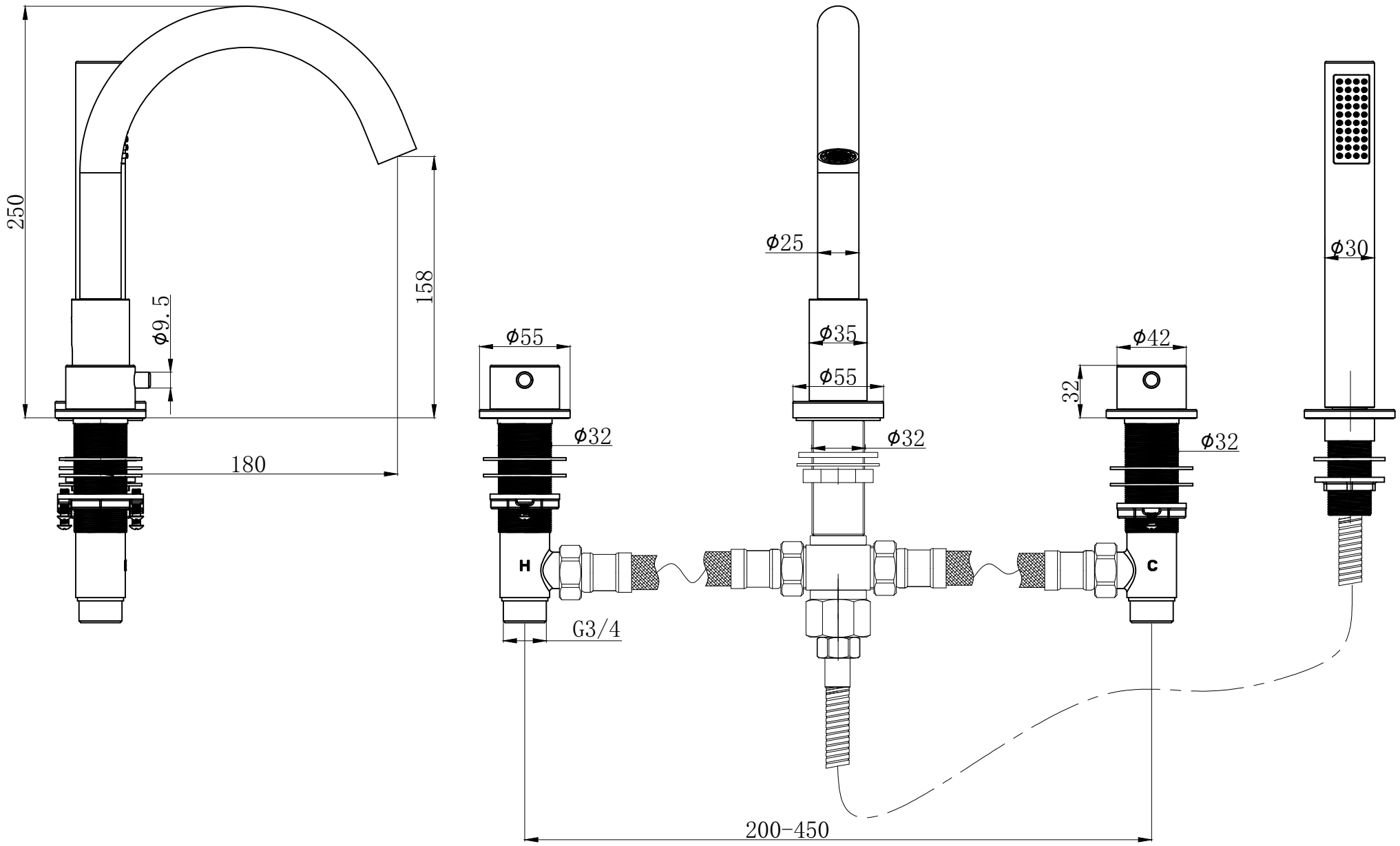
250
158
ϕ9.5
180
ϕ55
ϕ32
H
G3/4
ϕ25
ϕ35
ϕ55
ϕ32
ϕ42
32
ϕ32
C
ϕ30
200-450