27.0245 – Grab rails (5 pack), White

Technical Drawing for Grab Rails only.

Eastbrook Road, Gloucester GL4 3DB
Technical Helpline: 01452 317890
email: technical@eastbrookco.com

Contents of pack:

1 off	White close coupled pan - 455mm high
1 off	White universal cistern with left or right handing (bottom inlet)
1 off	Chrome spatula flushing lever handle
1 off	White seat (ring only)
1 off	White wall hung basin 450 x 320mm
1 pair	Basin hangers
1 off	Chrome lever action spray mixer tap
1 off	Chrome 32mm flush grated waste
1 off	32mm plastic bottle trap
5 off	600 x 35mm grab rails
1 off	Hinged support rail including toilet roll holder

Claygate Stock Code 52.DMCL*

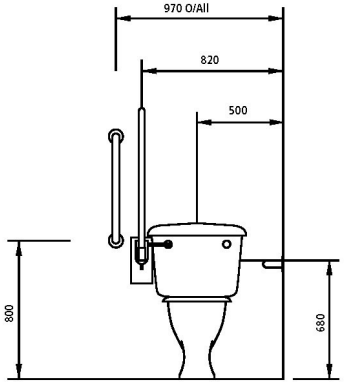

View on B-B

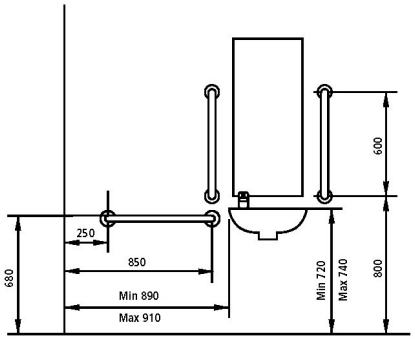

View on A-A

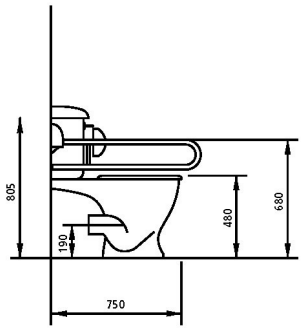

View on C-C

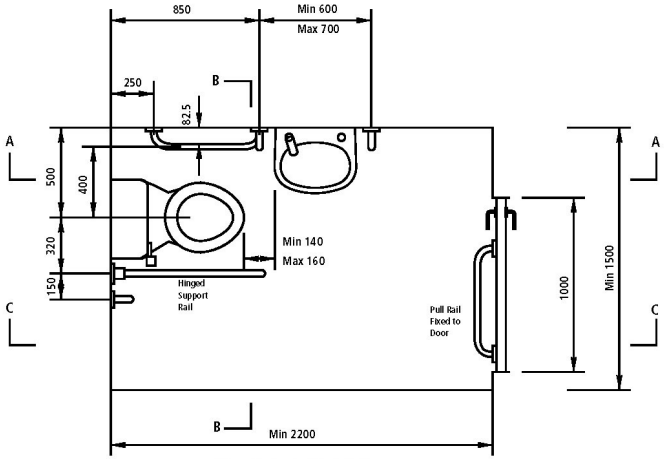

Plan of a typical installation