Eastbrook

Eastbrook Road Gloucester GL4 3DB

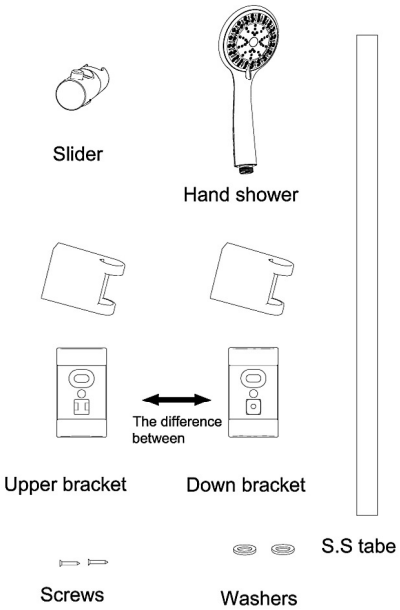


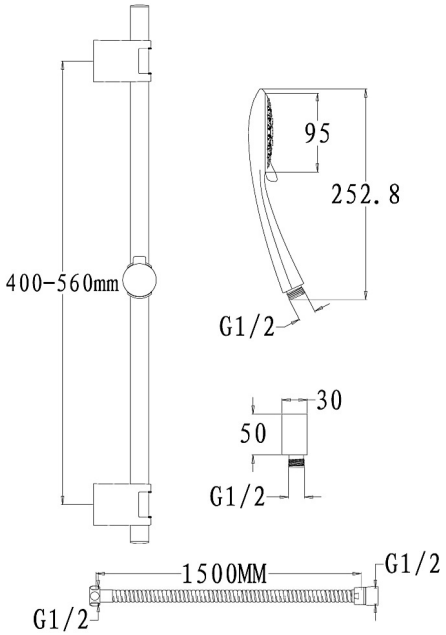


1.Drill the holes and put the plugs into the wall.

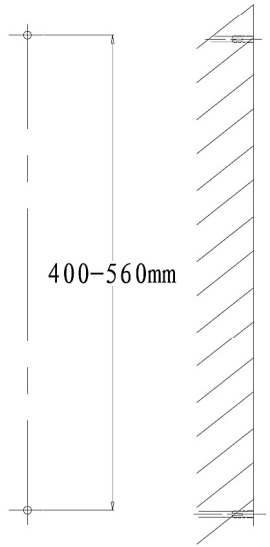


2.Fix the upper and down bracket to the wall.Pay attention to the upper and down bracket,they are difference.

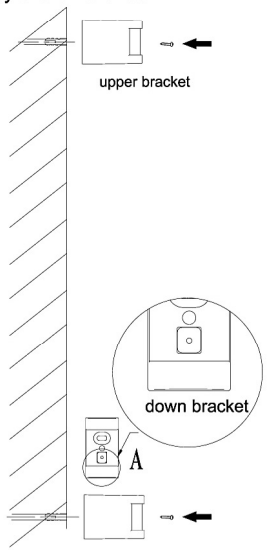


3.Put the S.S tabe through the down bracket,and assenbyl the slider onto the tabe.

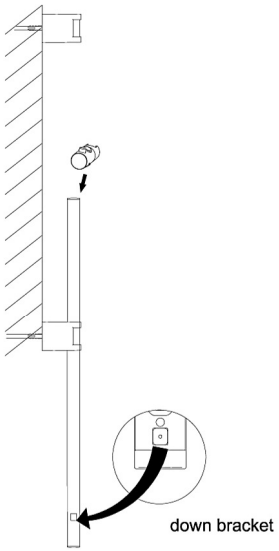


4.The down bracket has a salient point,it need to inset to the gap of the tabe.

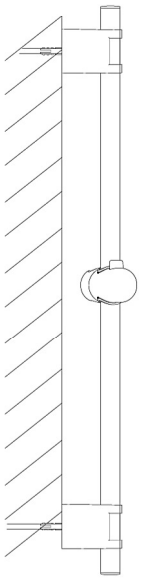

5.Connect the hand shower and elbow.

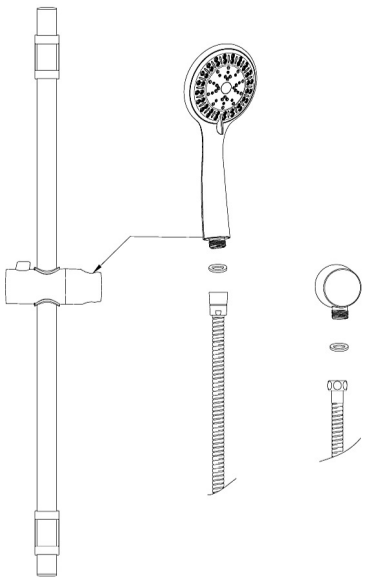
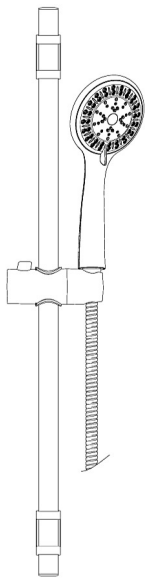
6.Finish.