Eastbrook Road
Gloucester, GL4 3DB
01452 317800
www.eastbrooktrade.com

Eastbrook

DATASHEET

Image

Drawing

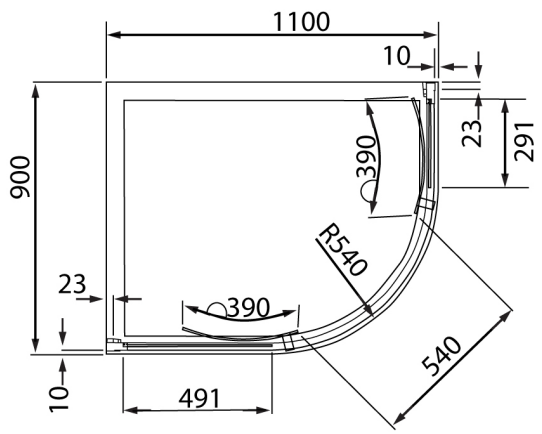

General Information

Product:	58.2108
Description:	Volente offset quad 1100 x 900
Product Type:	Offset Quad Shower Enclosures
Brand:	Eastbrook Company
Colour:	Brushed Brass
Material:	Tempered Glass
Height (mm):	1850mm
Width (mm):	900mm
Length (mm):	1100mm
Net Weight (kg) (kg):	54kg
Product Range:	Volente

Product Specifications

Warranty:	10 Year(s)
Door opening (mm):	540mm
Easy Clean glass:	Yes
Finish:	Brushed
Frameless:	No
Glass Thickness (mm):	6mm
Glass type:	Clear Glass
Waste Included:	No
Adjustment (mm):	1067-1090/867-890mm
Enclosure Size:	1100 x 900