Eastbrook Road
Gloucester, GL4 3DB
01452 317800
www.eastbrooktrade.com

Eastbrook

# DATASHEET

## Image

## General Information

| | |
|---|---|
| Product: | 78.0046 |
| Description: | Round Offset Shower Arm Diameter22 x 400mm |
| Product Type: | Shower Arm |
| Brand: | Eastbrook Company |
| Colour: | Matt Black |
| Height (mm): | 60mm |
| Width (mm): | 80mm |
| Length (mm): | 400mm |
| Net Weight (kg) (kg): | 0.4kg |

## Product Specifications
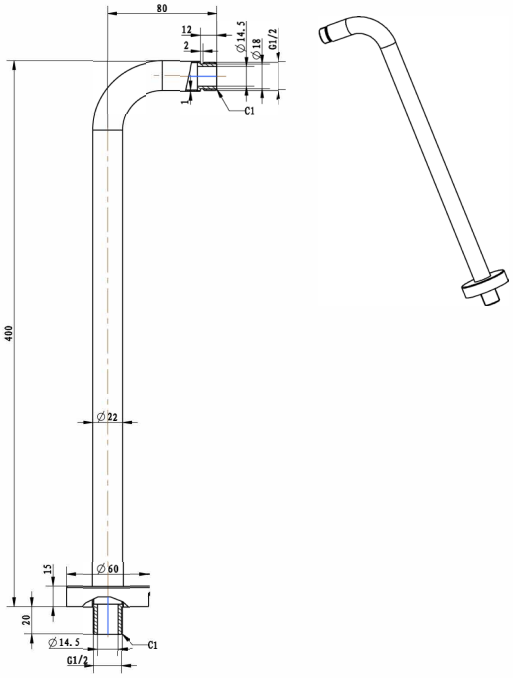
## Drawing