Eastbrook Road
Gloucester, GL4 3DB
01452 317800
www.eastbrooktrade.com

Eastbrook

DATASHEET

Image

General Information

Product:	103.009
Description:	Centa Curved Ceramic Top
Website Link:	(Click Here)
Product Type:	Basin
Brand:	Eastbrook Company
Colour:	White
Material:	Ceramics
Height (mm):	150mm
Width (mm):	618mm
Length (mm):	465mm
Net Weight (kg):	11kg
Product Range:	Centa

Product Specifications

Finish:	Ceramic

Eastbrook Road
Gloucester, GL4 3DB
01452 317800
www.eastbrooktrade.com

Eastbrook
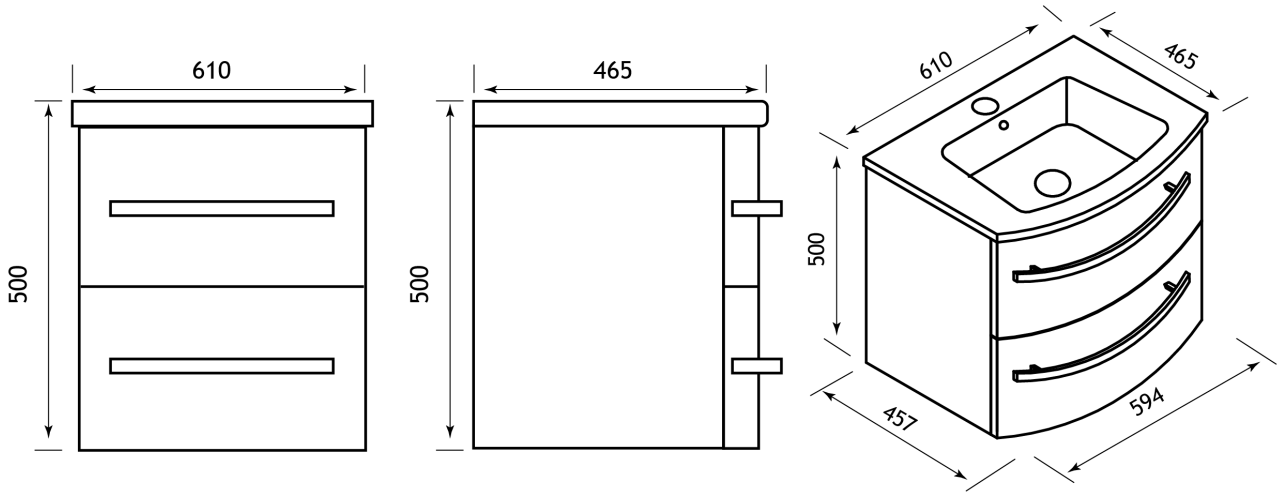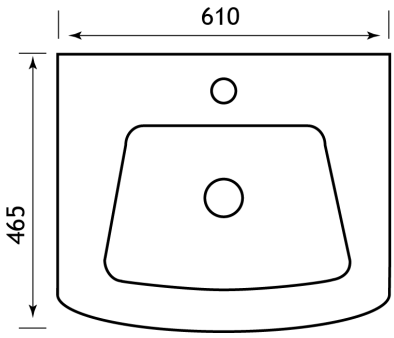
Drawing