Eastbrook Road
Gloucester, GL4 3DB
01452 317800
www.eastbrooktrade.com

Eastbrook

DATASHEET

Image

General Information

Product:	41.1067
Description:	Imperia 4 Column Radiator Feet (pair)
Product Type:	Radiator Feet
Brand:	Eastbrook Company
Colour:	Matt Anthracite
Material:	Mild Steel
Net Weight (kg) (kg):	1.15kg
Product Range:	Imperia

Product Specifications

Warranty:	5 Year(s)
Finish:	Matt
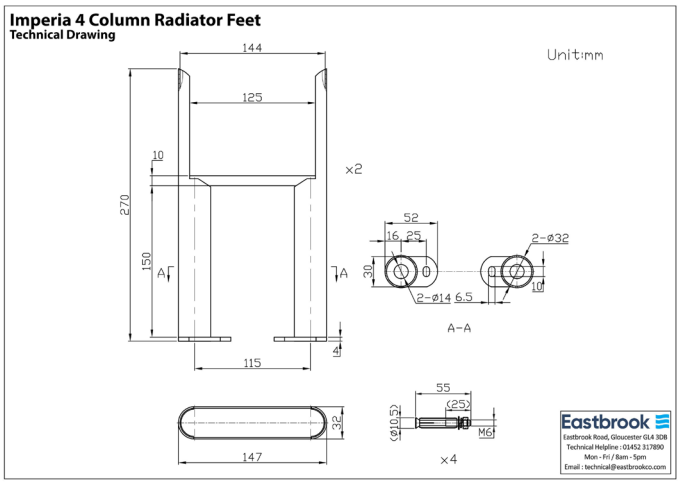
Drawing