Eastbrook Road
Gloucester, GL4 3DB
01452 317800
www.eastbrooktrade.com

Eastbrook

DATASHEET

Image

General Information

Product:	93.0042
Description:	Kubix Slider Rail Kit
Website Link:	(Click Here)
Product Type:	Rail Kit
Brand:	Eastbrook Company
Colour:	Chrome
Height (mm):	770mm
Width (mm):	142mm
Length (mm):	80mm
Net Weight (kg) (kg):	1.26kg
Product Range:	Kubix

Product Specifications

Finish:	Polished
Minimum Bar Pressure re-	0.1
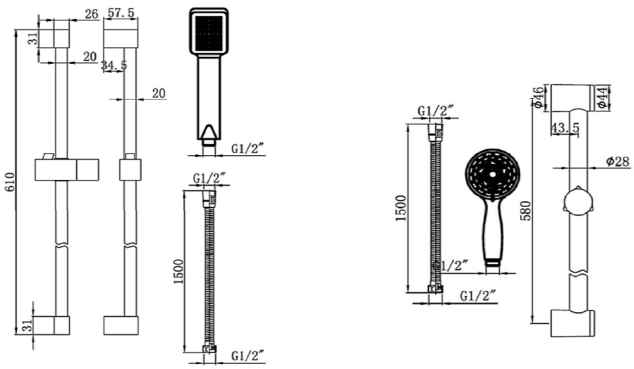
Drawing