ProPure 4 in 1 Monobloc

abode

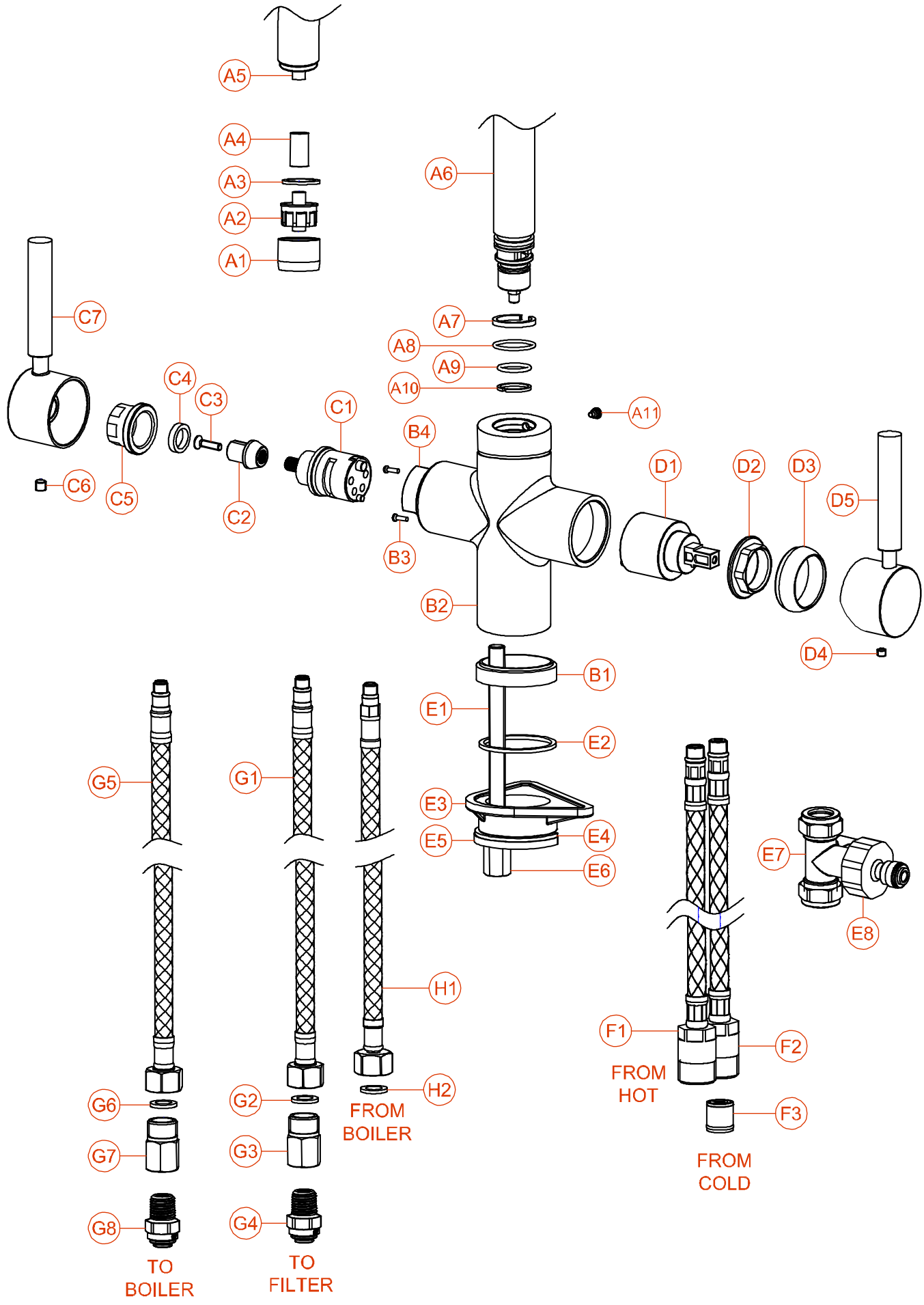

ProPure 4 in 1 Monobloc

abode

General Advice:

- These instructions are intended as a guide only, if you are in any doubt you should seek the advice of a qualified professional.
- Take care not to mark finished parts with screwdrivers or other tools.
- Use a pair of rubber gloves to get a better grip on decorative hand tight parts.
- Ensure all parts are reassembled tightly.
- After maintenance test that all assemblies are water tight and function correctly.
- Always isolate the hot, cold and boiling water and power supplies, before starting any maintenance allow the boiler to cool, once isolated you should drain any residual water from your system.

To replace the boiled water/filter valve:

1. Loosen grub screw (C6) on the underside of handle (C7) using a 3mm A/F Allen key.
2. Pull the handle (C7) horizontally away from the tap.
3. Using a 2.5mm A/F Allen key unscrew bolt (C3).
4. Pull valve bush (C2) and extension (C4) horizontally away from valve (C1).
5. Unscrew bolts (B3) using a 2.5mm A/F Allen key and remove semi-circular handle stop (B4). Note the position / orientation with a camera (to aid replacement).
6. Hold the body of the tap (B2) firmly. Using a 17mm x 21mm box spanner remove valve locking collar (C5) and remove valve (C1).
7. Clean the Inside of chamber of (B2) with a soft wet cloth.
8. Reassemble the tap in the reverse order. **Note: When placing the valve bush (C2) back onto the new valve (C1) make sure that the valve is in the off position. The flat section of the bush (C3) also needs to be facing upwards.**

To replace the cold valve:

1. Loosen grub screw (D4) on the underside of handle (D5) using a 2.5 mm A/F Allen key.
2. Pull the handle (D5) horizontally away from the tap.
3. Unscrew the decorative cover (D3) horizontally away from tap body (B2) by hand.
4. With the tap body (B2) fixed to the sink/base unit and whilst holding the tap body, using an adjustable spanner unscrew the valve lock nut (D2).
5. Clean the Inside of valve chamber (B2) with a soft wet cloth.
6. Replace the faulty valve (D1) with the new one and reassemble in reverse order.

To replace the spout o-rings:

1. Loosen grub screw (A11) on the rear of body (B2) using a 2.5mm A/F Allen key.
2. Pull the spout (A6) vertically away from the body (B2).
3. Remove the old O-rings (A8 & A9) using a small screwdriver or similar.
4. If worn, remove the white PTFE spacer (A7 & A10).
5. Ensure the inside of the spout body chamber (B2) and the spout base (A6) is clean of dirt and grit with a soft wet cloth.
6. If required locate the new white PTFE spacer (A7 & A10).
7. Carefully locate the new O-rings (A8 & A9) onto the spout base (A6).
8. Grease the O-rings (A8 & A9) thoroughly with silicone or alternative similar grease.
9. Reassemble the tap in the reverse order.

To replace/clean the spout aerator:

1. Unscrew aerator housing (A1).
2. Pull aerator (A2) vertically away from the inner PTFE tube connector (A4) located inside spout. Hold connector (A4) when doing this.
3. If required replace aerator seal (A3).
4. Hold connector (A4), then **firmly** push the new aerator (A2) onto the connector (A4) located inside spout (A4).
5. Place aerator housing (A1) over aerator (A2) and screw back onto spout (A4).

Important: You must ensure that the spout inner tube (A5), connector (A4) and aerator (A2) are firmly pushed together on reassembly. Should you accidently let go of the inner spout tube a pen, paper clip or thin screw driver can be used to pull it outside of the spout again.