Protex Monobloc

abode

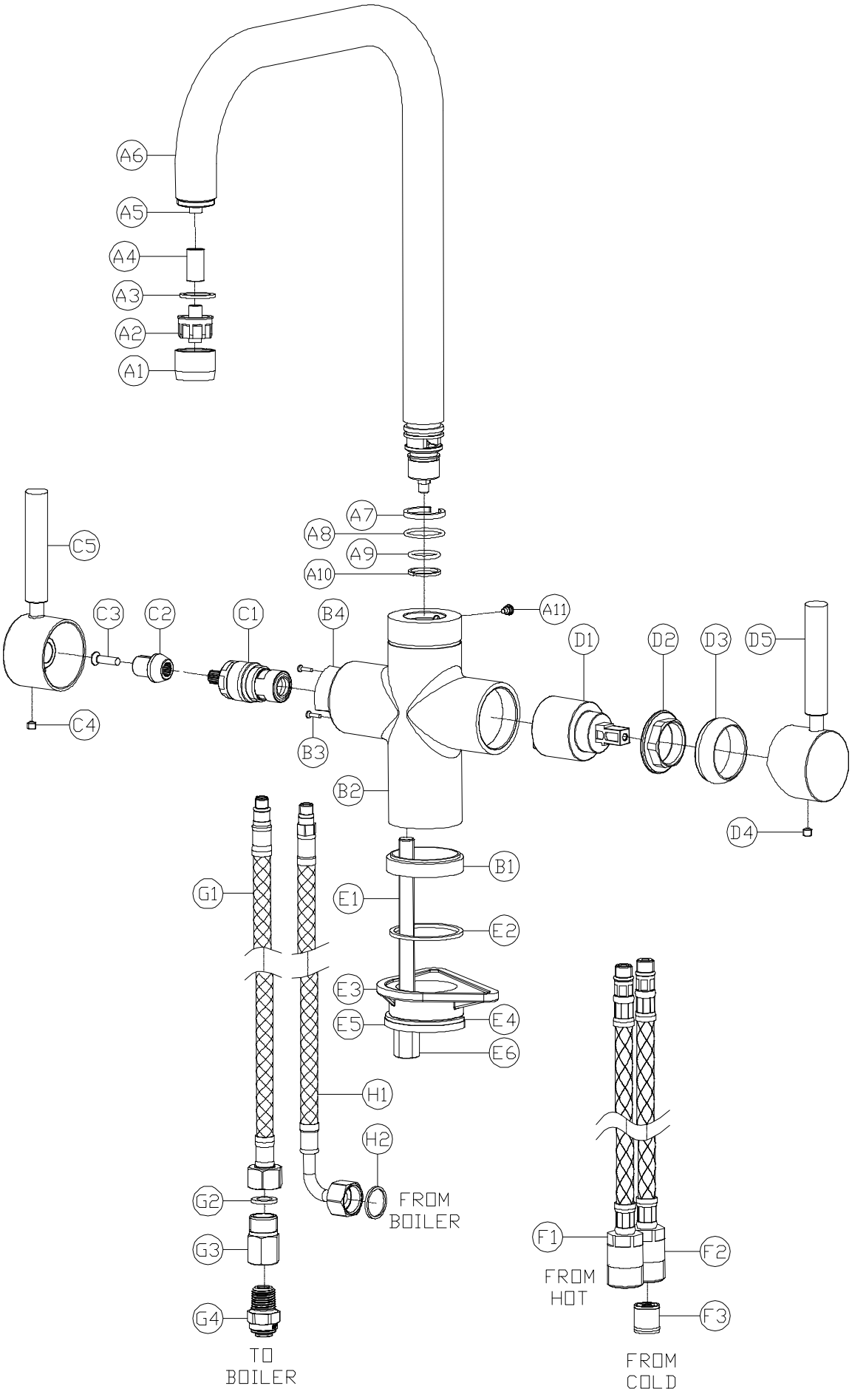

Protex Monobloc

abode

General Advice:

- These instructions are intended as a guide only, if you are in any doubt you should seek the advice of a qualified professional.
- Take care not to mark finished parts with screwdrivers or other tools.
- Use a pair of rubber gloves to get a better grip on decorative hand tight parts.
- Ensure all parts are reassembled tightly.
- After maintenance test that all assemblies are water tight and function correctly.
- Always isolate the hot, cold and boiling water and power supplies, before starting any maintenance allow the boiler to cool, once isolated you should drain any residual water from your system.

To replace the boiled water valve:

Please note: that the symptom of the boiled water valve (C1) leaking (water dripping constantly from the centre spout pathway only) is the same if the boiler temperature calibration know is set too high. In order to check which is the cause, switch of the boiler and wait a few minutes, if the dripping stops then you likely only need to recalibrate your boiler rather than replace the valve, see http://www.pronteau.co.uk/support/videos for more help or refer to the user guide supplied or available on the pronteau website.

1. Loosen grub screw (C4) on the underside of handle (C5) using a 3mm A/F Allen key.
2. Pull the handle (C5) horizontally away from the tap.
3. Using a 2.5mm A/F Allen key unscrew bolt (C3).
4. Pull valve bush (C2) horizontally away from valve (C1).
5. Hold the body of the tap (B2) firmly. Using a 17mm x 21mm box spanner remove valve (C1). Note if the semi-circular handle stop (B4) needs removing for better access note the position / orientation with a camera (to aid replacement) then remove on bolts (B3) using an 2.5mm allen key.
6. Clean the Inside of chamber of (B2) with a soft wet cloth.
7. Reassemble the tap in the reverse order. **Note: When placing the valve bush (C2) back onto the new valve (C1) make sure that the valve is in the off position. The flat section of the bush (C2) also needs to be facing upwards.**

To replace the cold valve:

1. Loosen grub screw (D4) on the underside of handle (D5) using a 2.5 mm A/F Allen key.
2. Pull the handle (D5) horizontally away from the tap.
3. Unscrew the decorative cover (D3) horizontally away from tap body (B2) by hand.
4. With the tap body (B2) fixed to the sink/base unit and whilst holding the tap body, using an adjustable spanner unscrew the valve lock nut (D2).
5. Clean the Inside of valve chamber (B2) with a soft wet cloth.
6. Replace the faulty valve (D1) with the new one and reassemble in reverse order.

To replace the spout o-rings:

1. Loosen grub screw (A11) on the rear of body (B2) using a 2.5mm A/F Allen key.
2. Pull the spout (A6) vertically away from the body (B2).
3. Remove the old O-rings (A8 & A9) using a small screwdriver or similar.
4. If worn, remove the white PTFE spacer (A7 & A10).
5. Ensure the inside of the spout body chamber (B2) and the spout base (A6) is clean of dirt and grit with a soft wet cloth.
6. If required locate the new white PTFE spacer (A7 & A10).
7. Carefully locate the new O-rings (A8 & A9) onto the spout base (A6).
8. Grease the O-rings (A8 & A9) thoroughly with silicone or alternative similar grease.
9. Reassemble the tap in the reverse order.

To replace/clean the spout aerator:

1. Unscrew aerator housing (A1).
2. Pull aerator (A2) vertically away from the inner PTFE tube connector (A4) located inside spout. Hold connector (A4) when doing this.
3. If required replace aerator seal (A3).
4. Hold connector (A4), then **firmly** push the new aerator (A2) onto the connector (A4) located inside spout (A4).
5. Place aerator housing (A1) over aerator (A2) and screw back onto spout (A4).

Important: You must ensure that the spout inner tube (A5), connector (A4) and aerator (A2) are firmly pushed together on reassembly. Should you accidently let go of the inner spout tube a pen, paper clip or thin screw driver can be used to pull it outside of the spout again.

Troubleshooting:

If you are experiencing any of the following symptoms relating only to the left hand (98c water handle):

- The 98c water is running from the spout centre when the handle is vertical.
- The handle rotates backward further than vertical.
- The 98c water can be activated without first depressing the handle lever.

In these instances, you must:

1. Turn the boiler into standby mode (to prevent the possibility of accident before repair).
2. Remove the handle (C5) by loosening grub screw (C4) at the base of the handle using 3mm allen key and pulling the handle (C5) away from the body.
3. (If damaged) remove the two screws (B3) holding the white stopper ring (B4) in place using a 2.5mm allen key, remove and replace the plastic stopper ring (B4).
4. (If damaged or badly scored) Unscrew and rotate 180° then reseat the brass valve connector (C2) to the valve (C1) using a 2.5mm allen key to loosen screw (C3).
5. Turn the valve (C1) fully backwards (anticlockwise).
6. Reattach the handle (C5) in the upright position and firmly tighten handle grub screw (C4) using the 3mm allen key.
7. Check the handle lock now engages correctly, if not repeat steps 5 & 6.
8. Flush the boiler with cold water for a minimum of 5 minutes, then turn on the boiler and allow to fully reheat before use.