Important Technical Data

Minimum operating pressure 0.75 bar
Maximum operating pressure 5.5 bar*

Maximum hot water temperature 70°C*
Recommended hot water temperature 46°C

Note: If these temperatures or pressures are exceeded, even for short periods, damage can result. In these instances a thermostatic mixing or pressure reducing valve should be installed.

All Abode taps are either WRAS approved or manufactured in accordance with recognised European standards. Please ensure that your Abode Kitchen mixer is fitted in accordance with Local Water Byelaws.

These installation guidelines have been prepared for your direction and you must exercise due care at all times. We do not accept responsibility for problems that may occur through improper installation. Whilst assembling the tap take care not to accidentally loosen any screwed assemblies.

Manufacturers Product Reference

©Abode
05/2026

Warning from your Water Supplier

This type of tap will not maintain an appropriate tap gap, because part of the tap assembly (the hose attachment) can fall below the spill over level of the sink. Therefore it must not be directly connected to the drinking water supply without the protection of an appropriate backflow arrangement, as agreed by your local water supplier. If the tap assembly is required to be fed from storage, this tap may require a water pressure higher than that provided by a normal storage gravity fed system (e.g. typical gravity fed system - 0.5 bar).

If boosting/pumping of the system is required advance notification to the local water supplier may be required. The tap assembly must only be supplied via a wholesome source of water (hot and cold supplies). It is important to ensure that this tap is connected in accordance with the Water Supply (Water Fittings) Regulations (Byelaws in Scotland).

abode

Unit L, Zenith Park, Whaley Road, Barnsley,S75 1HT.
Tel: 01226 283434 Fax: 01226 282434 www.abode.eu

All errors and omissions excepted.

Hesta Pull Out





5 Year warranty

Terms and Conditions

In the unlikely event that you should experience any defect in the materials or workmanship of your new Abode mixer within 5 years of purchase, the purchaser's sole remedy shall be the replacement (at the manufacturer's discretion) of all or any part of the product that is defective. All working parts and valves are guaranteed for a period of 5 years from purchase. Decorative surface finishes and O-rings are guaranteed for 1 year from the date of purchase provided that our advice concerning care has been observed and no scouring agents have been used. This is provided that the mixer or tap has been used for normal domestic purposes and that the care, installation and maintenance instructions have been observed. The warranty extends to the original purchaser only.

Marks, scuffs and scratches caused by improper installation or accidental damage are not covered by this guarantee. Neither are shade variations or any damage or defect caused by incorrect installation or abuse of the fitting.

As we are continuously improving and developing our range of products, finishes & colours, in the event of a valid claim, we may not be able to provide an identical replacement for the defective product throughout the guarantee period. Where an identical product is no longer available, we will supply the nearest equivalent from our then current product range. In assessing your claim, we must be given the opportunity to inspect the product as installed prior to removal. Any product returns must be packaged as received and complete.

No other warranties, express or implied, are made, including merchantability or fitness for a particular purpose. Under no circumstances shall the manufacturer be liable for any loss or damage arising from the purchase, use or inability to use this product, or for any special, indirect, incidental or consequential damages. No liability is accepted for consequential damage to other household fixtures, fittings or furnishings arising from this claim, even if attached to the product. No installer, dealer, agent or employee of Abode Home Products Limited has the authority to modify the obligations or limitations of this warranty.

Care Instructions for your Kitchen Sink tap

To maintain the appearance of this product, ensure that it is regularly cleaned only using a clean, soft damp cloth. A solution of warm water and a mild liquid detergent may be used where necessary, and then the fitting rinsed thoroughly and wiped dry. Any other cleaning action will invalidate your warranty.
If the mixertap has a diffuser it should be unscrewed and cleaned periodically in warm water.

Abrasive cleaners, scouring cleaners and acidic cleaners **must not be used** under any circumstances. Avoid contact with all solvents (including chlorinated solvents, ketones or acetones as these may result in surface deterioration or etching). Also avoid contact with any harsh household chemicals such as oven cleaners, drain cleaners, rust removers, paint strippers and toilet bowl cleaners, bar keepers friend or Brasso.

Please leave these instructions for your customer.

Parts and Contents

Key	Description	Qty
A	Tap body	1
B	Base column and locating ring	1
C	Base plinth and upper seal	1
D	Sink or worktop	0
E	White triangular stabiliser **(for stainless steel sinks only)**	1
F	Rubber horseshoe	1
G	Metal horseshoe	1
H	Hot water rigid inlet pipe	1
I	Hot water flexible inlet pipe	1
J	Mixed water rigid outlet pipe	1
K	Fixing studs	2
L	Fixing nuts	2
M	Cold water rigid inlet pipe	1
N	Cold water flexible inlet pipe	1
O	Mixed water nylon hose	1
P	Rubber seal	1
Q	Hose weight	2
R	Hose weight screws	4

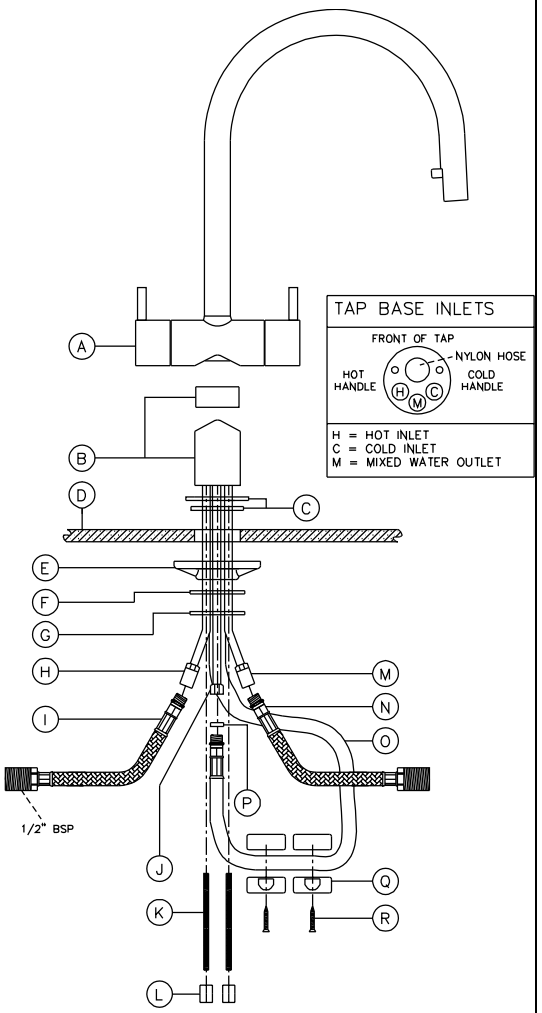

Installation Instructions:

Preparation

Before installing the new mixer it is essential that you thoroughly flush through the supply pipes in order to remove any remaining solder, swarf or impurities from your system. Failure to carry out this simple procedure could cause problems or damage to the workings of the mixertap.

We strongly recommend installing particle filters and isolation valves to both the hot and cold feed pipes in an accessible position. This will help to prevent premature failure of the valves and ease any future maintenance.

All parts should be removed from their packaging and inspected for any transport damage prior to installation.

Shut off your water heating system and ensure that your mains stopcock is closed. Open the lowest hot and cold taps in the house and allow the water to run until the cold-water storage tank and pipes are fully empty. Please note, the hot water storage cylinder (if applicable) will always remain full.

This mixertap requires a 35mm∅ tap hole, if replacing an existing tap, remove the tap & clean the end of the feed pipes using wire wool the tap hole area should be free from dirt and sealant.
Loosely position the tap and tail pipes to check if any alteration to the existing pipework is required, if this is the case do this now.

The installation of this product should respect requirement IRN R090

Installation:

1. Screw in the studded rods (**K**) into the base of the tap (**A**).
2. Pass the mixed water nylon hose (**O**) through the base column (**B**) and base plinth and seal (**C**). Locate the base (**B** & **C**) on the bottom of the tap (**A**)
3. Screw the hot water rigid pipe (**H**) into the base of the tap (marked **H** on inlet diagram). Screw the cold water rigid pipe (**M**) into the base of the tap (marked **C** on inlet diagram). Screw the mixed water rigid pipe (**J**) into the base of the tap (marked **M** on inlet diagram). **Note: A spanner should be used to tighten rigid inlet pipes (H, M & J) into tap body (A) ensuring that it is not overtightened. Rigid inlets (H, M & J) MUST be fitted.**
4. Place the mixertap (A) onto the sink, pass the rigid tail pipes (J, M & H), studded rods (K) and mixed water nylon hose (O) through the taphole.
5. If fitting the tap to a stainless steel sink the white triangular stabiliser (E) can be placed where shown to help to stabilise the weight of the tap.
6. Pass the rubber and then metal horseshoe (F & G) over the studded rods (K) and around the tail pipes.
7. Fasten the fixing nuts (L) securely onto the fixing studs (K) to fix the tap into its correct location.
8. Screw the cold water flexible pipe (N) into the rigid cold water inlet pipe (M).
9. Screw the hot water flexible pipe (I) into the rigid hot water inlet pipe (H).
10. Screw the mixed water nylon hose (O) into the mixed water rigid tail pipe (J) **using the small rubber seal (P) to make a watertight connection. Note: the nylon hose should be untwisted and able to move freely. The rigid inlet pipes (J, M & H) can be carefully bent to allow more space around the nylon hose.**
11. With the spout end pushed into the spout, fasten the hose weights (Q) around the lowest point of the nylon hose (O) using screws (R).
12. Connect the hot and cold tail pipes (I & N) to the water mains using a ½" BSPx15mm compression fittings.

Note: the hose weight is designed to pull the hose straight after use; it will not pull the spout head automatically back into the spout and may have to be returned by hand.

After installation

Once you have visually checked the new fittings and connections, ensure that all taps are closed except the new mixer tap which should be left open. Turn on the water supply at the mains stop cock. As the system starts to refill, check carefully for leaks. Once you are fully satisfied that there are no leaks, turn on the water heating.
Clean the tap to remove any marks created during installation as instructed then place the cloth bag that has been provided to protect the tap until it is ready for use.