Click Handspray

abode

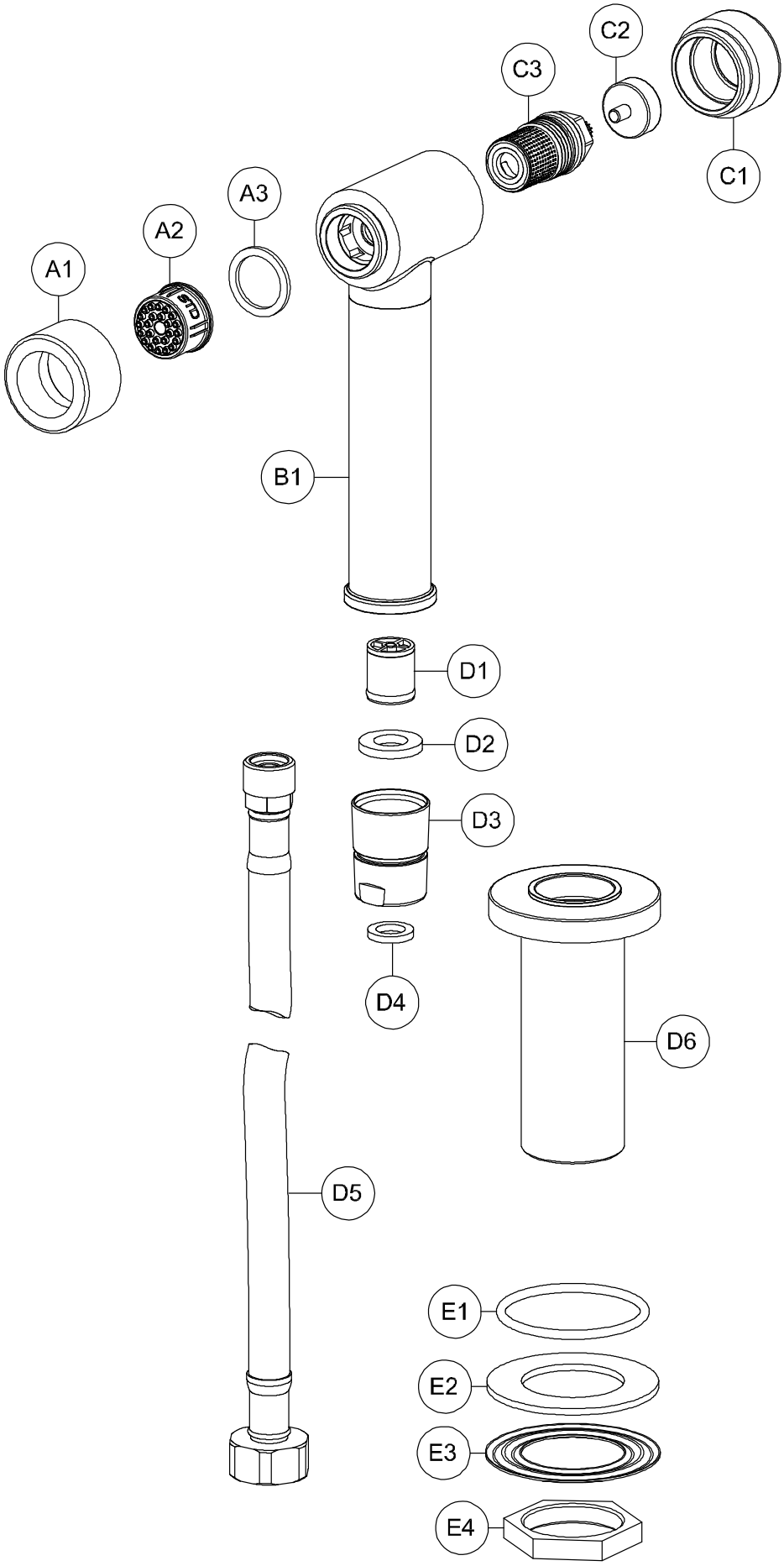

Click Handspray

General Advice:

- These instructions are intended as a guide only, if you are in any doubt you should seek the advice of a qualified professional.
- Take care not to mark finished parts with screwdrivers or other tools.
- Use a pair of rubber gloves to get a better grip on decorative hand tight parts.
- Ensure all parts are reassembled tightly.
- After maintenance test that all assemblies are water tight and function correctly.
- Always isolate the hot and cold water supplies before starting any maintenance, once isolated you should drain any residual water from your system.

To replace the valve:

1. Unscrew decorative cover (C1) by hand and pull vertically away from spray body (B1).
2. Unscrew push button (C2) by hand and pull horizontally away from valve (C3).
3. Using an adjustable spanner or socket unscrew valve (C3) anticlockwise.
4. Replace the faulty valve (C3) with the new one and assemble in reverse order.

To clean the aerator:

1. Unscrew the aerator housing (A1) by hand.
2. Clean the aerator (A2).
3. Screw aerator case (A1) back onto spout ensuring seal (A3) is in place as shown.