Installation:

1. Screw in the studded rod (**D**) into the base of the tap (**A**).
2. Place the base plinth (**B**) then upper seal (**C**) onto the base of the tap (**A**).
3. Screw the hot & cold water flexi tail pipes (**H** & **I**) into the base of the tap.
4. Place the mixertap (**A**) onto the sink or worktop, pass the tail pipes (**H &** I) and studded rod (**D**) through the taphole.
5. Pass the rubber and then metal horseshoe (**E** & **F**) over the studded rod (**D**) and around the tail pipes.
6. Fasten the fixing nut (**G**) securely onto the fixing stud (**D**) to fix the tap into its correct location.
7. Connect the hot and cold flexi tail pipes (**H** & **I**) to the water mains using a ½" BSPx15mm compression fittings.

After Installation:

Once you have visually checked the new fittings and connections, ensure that all taps and drains are closed except the new product which should be **left open**. Turn on (reconnect) the water supplies, check carefully for leaks around the installation and product function. Once you are sure of no leaks, close the new product and recheck for leaks, turn on the water heating power. Clean and dry the product of any marks from installation then cover the product with the bag provided to protect it until use.

Important Technical Data

Minimum operating pressure: 0.3 bar
Maximum operating pressure: 5.5 bar*

Flow characteristics: Dual flow
Maximum hot water temperature: 60°C*
Recommended hot water temperature: 46°C

*If these temperatures or pressures are exceeded, even for short periods, damage can result and will void your warranty. In these instances, reduce the incoming water temperature and or install a pressure reducing valve. Ensure that your Abode product is fitted in accordance with Local Water Byelaws or regulations by a qualified installer.
These installation guidelines have been prepared for your direction and you must exercise due care at all times. We do not accept responsibility for problems that may occur through improper installation. Whilst installing the product take care not to accidentally loosen any screwed assemblies.

Manufacturers Product Reference: AT2252, AT2253, AT2254, AT2255

©Abode -05/2025

abode

Unit L, Zenith Park, Whaley Road, Barnsley, S75 1HT
Tel: (+44) 01226 283434 or www.abodedesigns.co.uk

All errors and omissions excepted.

Ornate Monobloc

abode





5 Year Warranty
Terms and Conditions:

In the unlikely event that you should experience any defect in the materials or workmanship of your new Abode product within 5 years of purchase, the purchaser's sole remedy shall be the replacement (at the manufacturer's discretion) of all or any part of the product that is defective. All working parts and valves are guaranteed for a period of 5 years from purchase. Decorative surface finishes and O-rings are guaranteed for 1 year from the date of purchase provided that our advice concerning care has been observed and no scouring agents have been used. This is provided that the product has been used for normal domestic purposes only and that the care, installation and maintenance instructions have been observed. The warranty extends to the original purchaser only.

Marks, scuffs and scratches caused by improper installation or accidental damage are not covered by this guarantee. Neither are shade variations or any damage or defect caused by incorrect installation or abuse of the fitting.

As we are continuously improving and developing our range of products, finishes & colours, in the event of a valid claim, we may not be able to provide an identical replacement for the defective product throughout the guarantee period. Where an identical product is no longer available, we will supply the nearest equivalent from our then current product range. In assessing your claim, we must be given the opportunity to discuss your claim, review your proof of purchase and or inspect the product as installed prior to removal. Any agreed product return must be packaged as received and complete.

No other warranties, express or implied, are made, including merchantability or fitness for a particular purpose. Under no circumstances shall the manufacturer be liable for any loss or damage arising from the purchase, use or inability to use this product, or for any special, indirect, incidental or consequential damages. No liability is accepted for consequential damage to other household fixtures, fittings or furnishings arising from this claim, even if attached to the product. No installer, dealer, agent or employee of Abode has the authority to modify the obligations or limitations of this warranty.

Important Care Instructions for your Product:

To maintain the appearance of this product, ensure that it is regularly cleaned only using a clean, soft damp cloth. A solution of warm water and a mild liquid detergent may be used where necessary, and then the fitting rinsed thoroughly and wiped dry. Any other cleaning action or use of common domestic cleaning products will invalidate your warranty.
If the product has a plastic aerator insert at the end of the spout it should be unscrewed and the plastic internal insert only removed and cleaned or descaled to maintain flow performance. Do not use descaling solution on any decorative metal housing, rinse the insert thoroughly before reattaching in the reverse order.

Abrasive cleaners, scouring cleaners and acidic cleaners **must not be used on this product** under any circumstances. Avoid contact with all solvents (including chlorinated solvents, ketones or acetones as these may result in surface deterioration or etching). Also avoid contact with any harsh household chemicals such as oven cleaners, drain cleaners, rust removers, paint strippers and toilet bowl cleaners, bar keepers friend or Brasso.

Please leave these instructions for your customer.

Parts and Contents:

Key	Description	Qty
A	Mixertap body	1
B	Base Plinth	1
C	Upper Seal	1
D	Fixing Stud	1
E	Rubber Horseshoe	1
F	Metal Horseshoe	1
G	Fixing nut	1
H	Hot Flexi tail	1
I	Cold Flexi tail	1

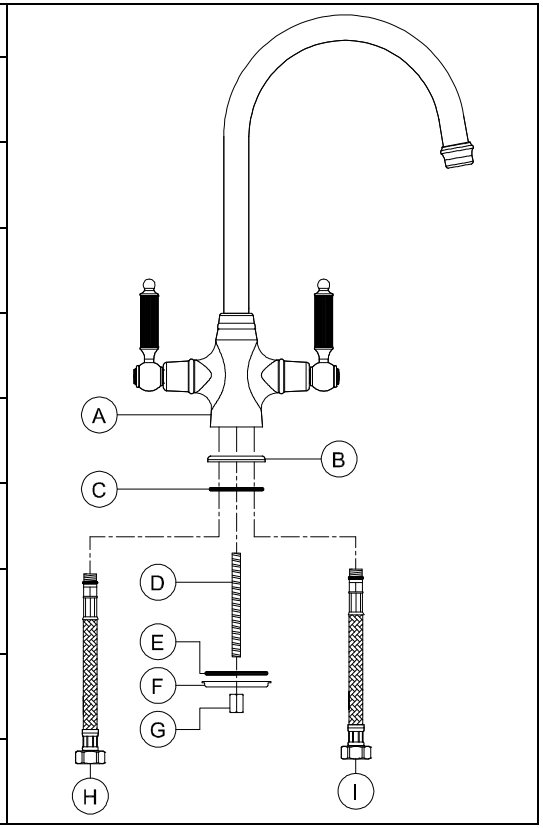

Installation Instructions:
Preparation

Before installing the new product it is essential that you thoroughly flush through the supply pipes in order to remove any remaining solder, swarf or impurities from your system. Failure to carry out this simple procedure could cause problems or damage to the workings of the product or reduce performance invalidating the warranty.

We strongly recommend best practice of installing particle filters and isolation valves to both the hot and cold feed pipes in an accessible position. This will help to prevent premature failure of the valves and ease any future maintenance.

All parts should be removed from their packaging and inspected for any transport damage prior to installation.

Shut off (isolate) your hot and cold water supply locally at the point of installation before continuing with the installation. If the water cannot be isolated locally the turn off the mains stopcock and power to any heating system, now open the lowest tap or drain point in the system until both hot and cold supplies are fully drained.

This product requires a 35mm∅ tap hole, if replacing an existing product, remove it and clean the end of the hot and cold feed pipes using wire wool, the tap hole area should be free from dirt and sealant.
If the handles on the product operate backwards and forwards, allow for this when planning the sink or tap hole position.
Loosely position the product and fittings to check if any alteration to the existing pipework is required, if needed, do this now.
If the product is single flow (see section important technical data "flow characteristics") then non return (check) valves must be installed to comply with regulations. Some products are supplied with non-return valves this will be noted in the instructions.

⚠ Correct use of Flexible Hose Connectors

If this product is supplied with flexible hose connections for ease of installation you must observe the conditions below, failure to observe these standard installation guidelines will invalidate the warranty for your product.

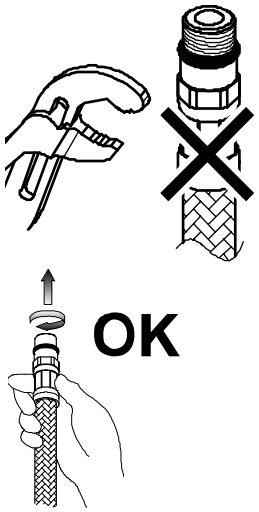

Always **screw the flexi hoses into the product only by hand,** until feeling mechanical rest, **a spanner must not be used on the product end of the connecting hose.**

Always use the pipes provided and not an alternative substitute

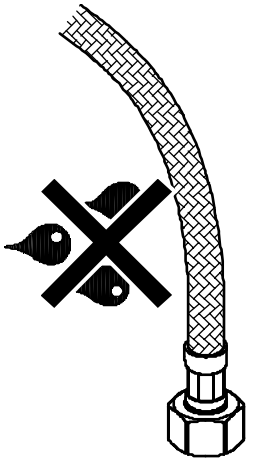

The braiding on the flexible hose **must not be in contact with anything else, for example chemicals, internal or external room walls or dissimilar metals or materials or sharp objects.**

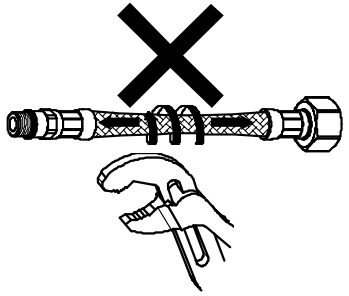

Never twist or stretch the flexible hose during installation.

Do not overtighten the hexagonal end of the hose connecting to the supply feeds when using a spanner causing the hose to twist.

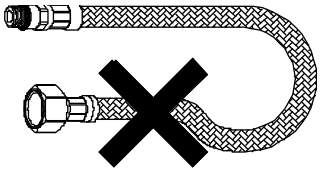

Hoses must not be double bent in multiple directions **kinked or looped**.

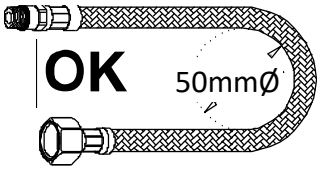

Observe the minimum bend radius of 50mm.

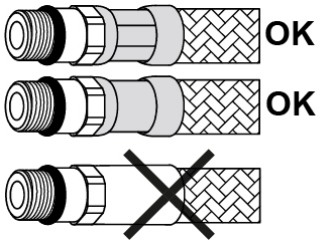

Before assembling the hose to the product **ensure the hose ferrule has been crimped** (as highlighted) on both ends of the hose after the braided hose sleeve.

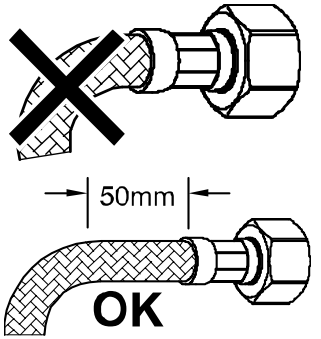

Both ends of the hose must have a **minimum 50mm straight section** before any bend.