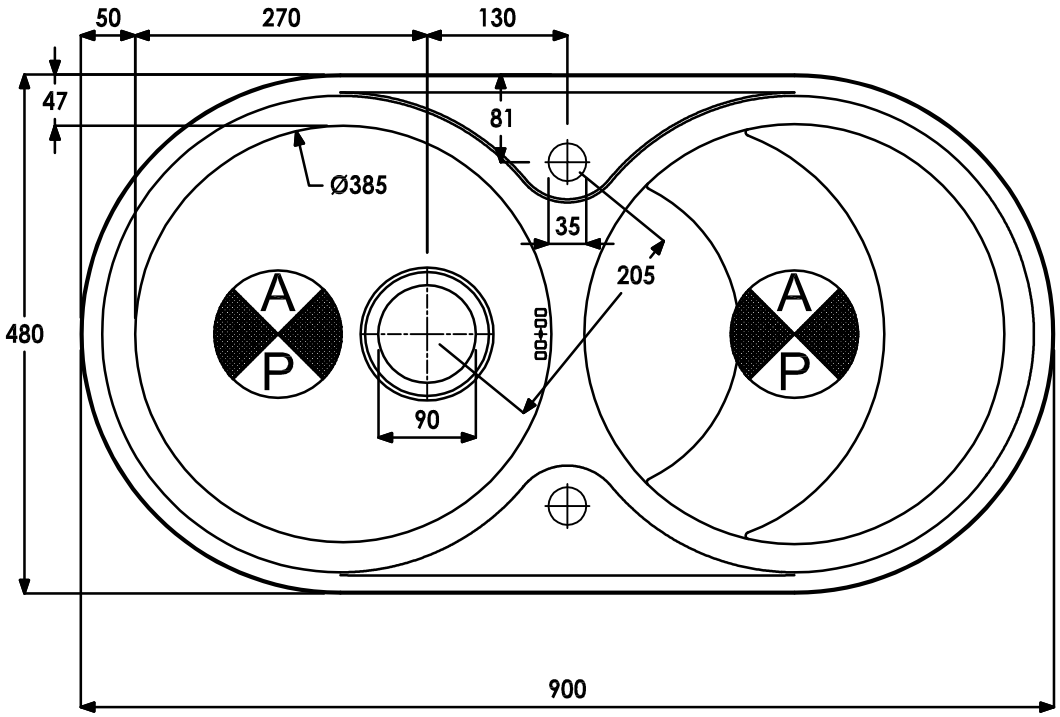
50
270
130
47
81
Ø385
35
205
480
A
P
A
P
90
900

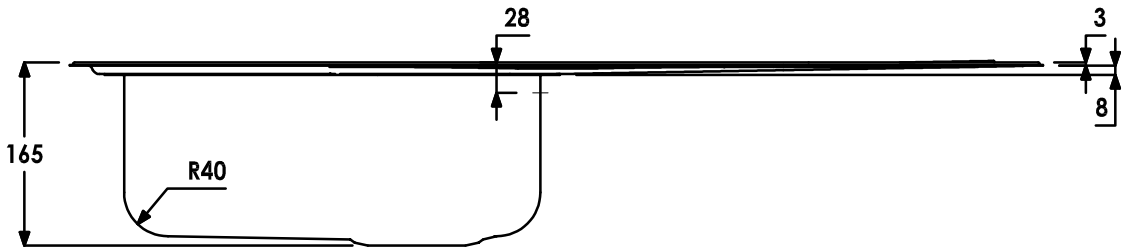
28
3
8
165
R40

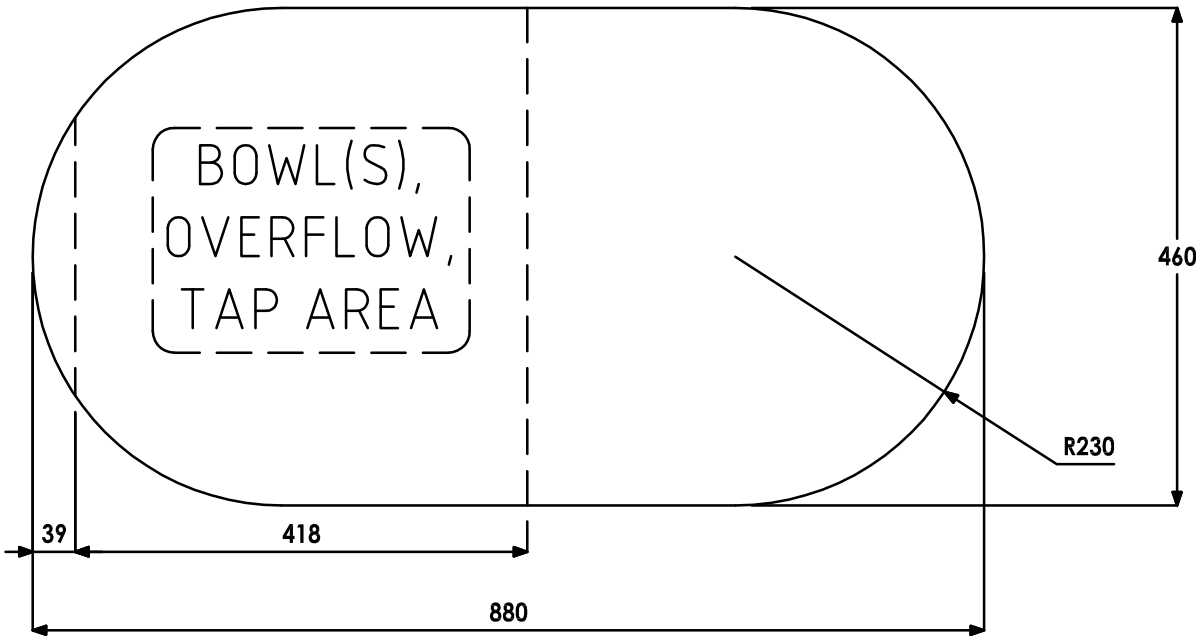
BOWL(S),
OVERFLOW,
TAP AREA
460
R230
39
418
880