Linear single lever

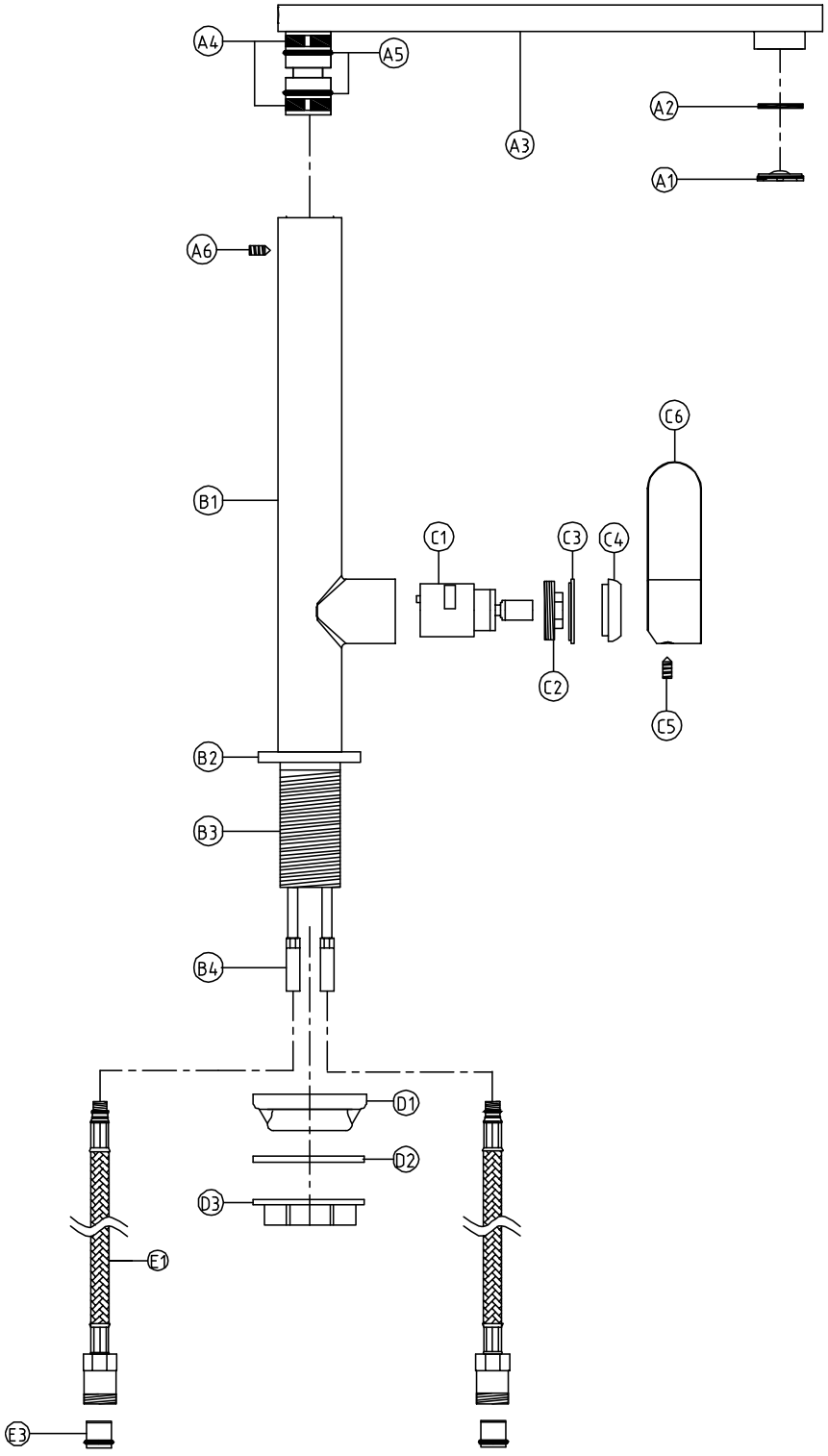

Linear single lever

General Advice:

- These instructions are intended as a guide only, if you are in any doubt you should seek the advice of a qualified professional.
- Take care not to mark finished parts with screwdrivers or other tools.
- Use a pair of rubber gloves to get a better grip on decorative hand tight parts.
- Ensure all parts are reassembled tightly.
- After maintenance test that all assemblies are water tight and function correctly.
- Always isolate the hot and cold water supplies before starting any maintenance, once isolated you should drain any residual water from your system.

To replace the valve:

1. Loosen the grub screw (C5) using a 2mm a/f Allen key.
2. Pull (C6) horizontally away from the tap body (B1).
3. With a precision screwdriver carefully lever off (C4) and (C3)
4. Hold the tap (B1) firmly at the base and unscrew the valve locking nut (C2) using a spanner.
5. Remove the old valve cartridge (C1).
6. Clean any debris from the chamber of the tap (B1).
7. Locate the new valve (C1) into the tap chamber (B1); ensure the pegs on the valve (C1) align with the recess in the chamber (B1).
8. Reassemble the tap in the reverse order.

To replace the spout o-rings:

1. Loosen grub screw (A6) on the rear of body (B1) using a 2.5mm A/F allen key.
1. Pull the spout (A3) vertically away from the body (B1).
2. Remove the old o-rings (A5) using a small screwdriver or similar.
3. If worn, remove the white PTFE spacers (A4).
4. Ensure the inside of the body (B1) and the spout base is clean of dirt and grit with a soft wet cloth.
5. If required locate the new white PTFE spacers (A4).
6. Carefully locate the new O-rings (A5) onto the spout base (A3)
7. Grease the O-rings (A5) thoroughly with silicone or alternative similar grease.
8. Reassemble the tap in the reverse order.

Linear single lever (4L +/- 10% Flow Limited)

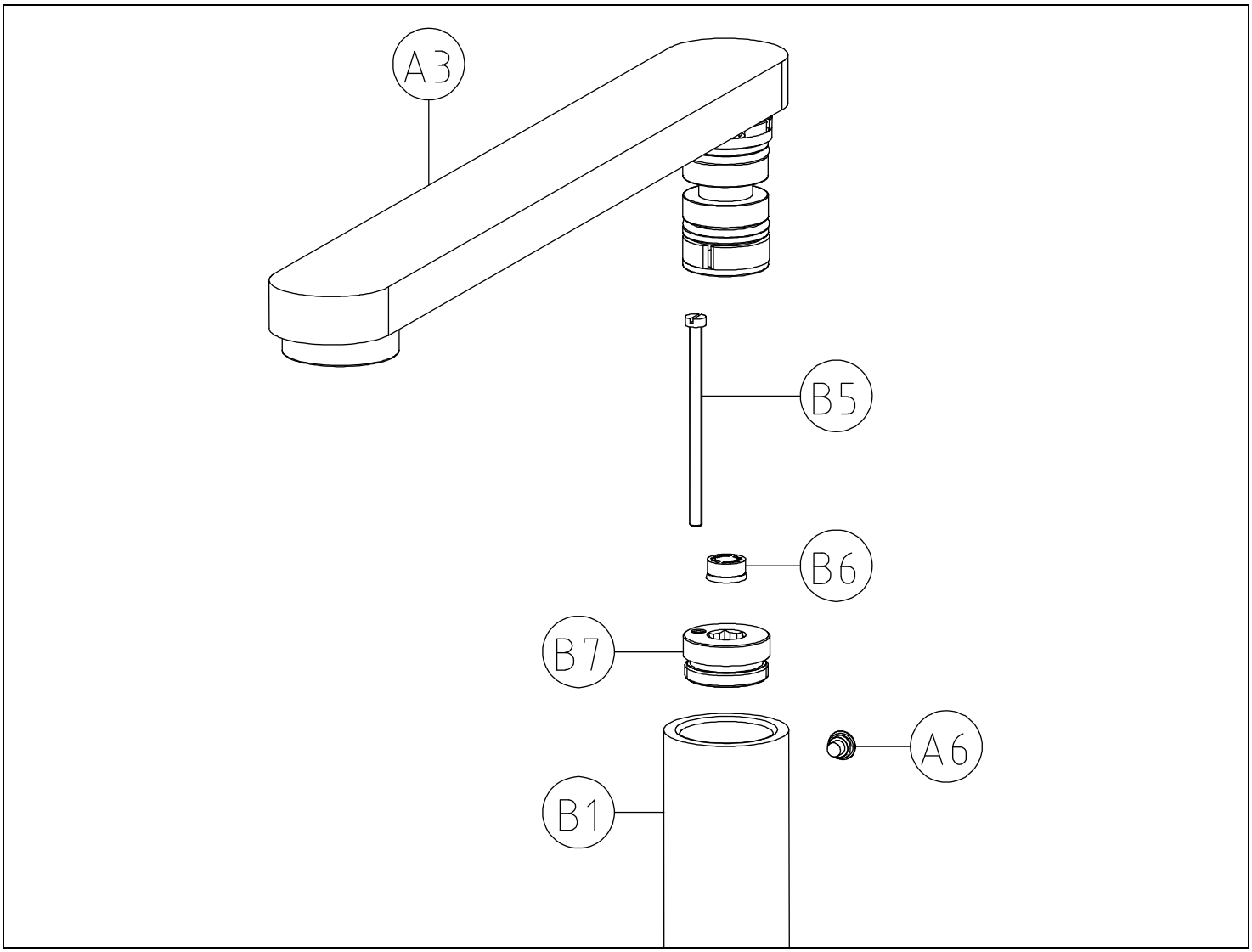

General Advice:

- These instructions are intended as a guide only, if you are in any doubt you should seek the advice of a qualified professional.
- Take care not to mark finished parts with screwdrivers or other tools.
- Use a pair of rubber gloves to get a better grip on decorative hand tight parts.
- Ensure all parts are reassembled tightly.
- After maintenance test that all assemblies are water tight and function correctly.
- Always isolate the hot and cold water supplies before starting any maintenance, once isolated you should drain any residual water from your system.

To remove and replace the flow limiter

1. Loosen grub screw (A6) on the rear of body (B1) using a 2.5mm A/F allen key.
2. Pull the spout (A3) vertically away from tap body (B1).
3. Screw bolt (B5) into limiter chamber (B7).
4. Unscrew limiter chamber (B7) using an allen key.
5. Once unscrewed pull the limiter chamber (B7) out using bolt (B5).
6. Once limiter chamber (B7) is removed form the tap body (B1) remove and clean limiter (B6). If needed replace the limiter (B6).
7. Reassemble the tap in reverse order.