New Media single lever

abode

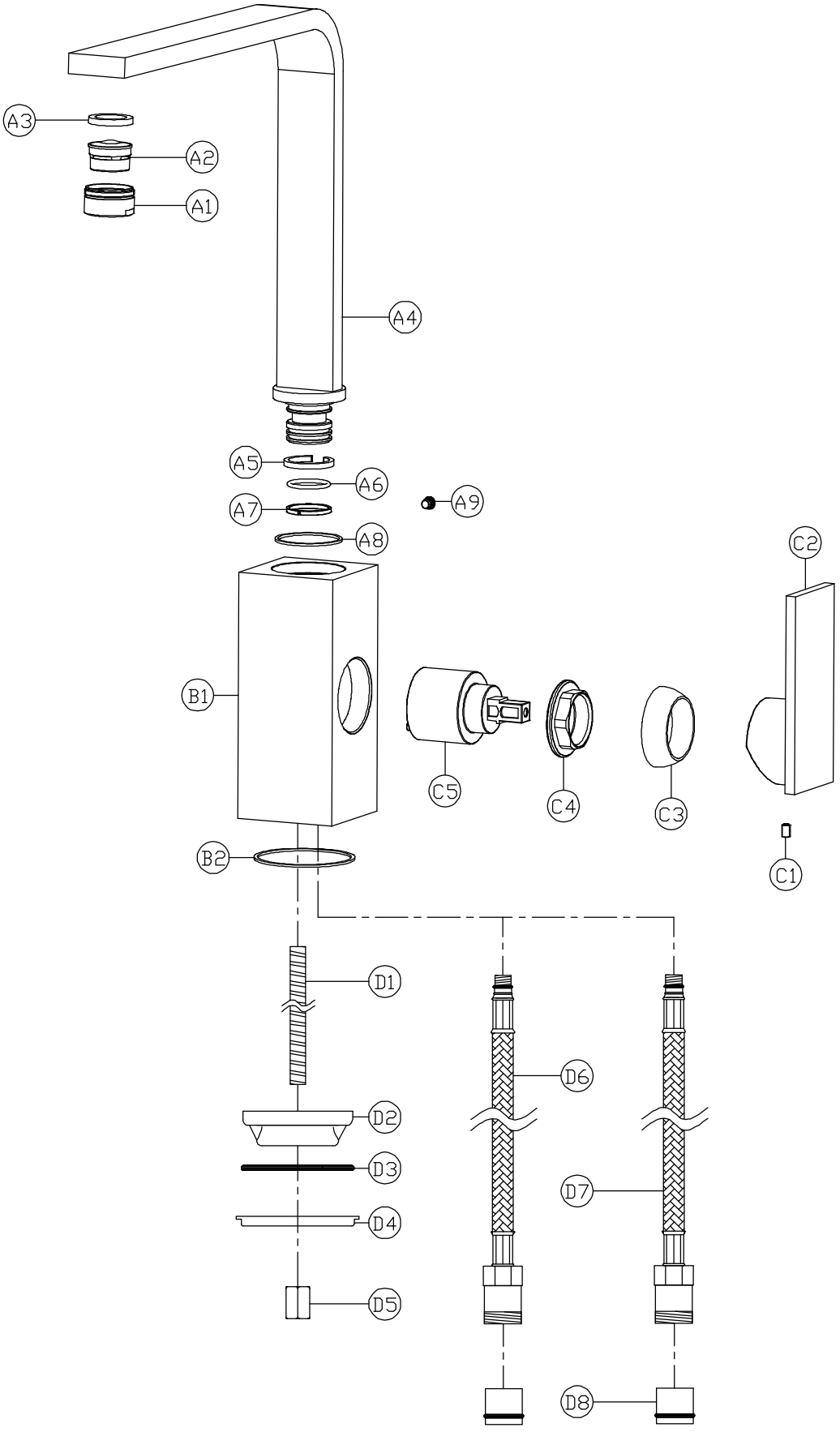

New Media single lever

General Advice:

- These instructions are intended as a guide only, if you are in any doubt you should seek the advice of a qualified professional.
- Take care not to mark finished parts with screwdrivers or other tools.
- Use a pair of rubber gloves to get a better grip on decorative hand tight parts.
- Ensure all parts are reassembled tightly.
- After maintenance test that all assemblies are water tight and function correctly.
- Always isolate the hot and cold water supplies before starting any maintenance, once isolated you should drain any residual water from your system.

To replace the valve:

1. Tilt the handle (C2) so grub screw (C1) is more visible.
2. Loosen grub screw (C1) using a 2mm A/F Allen key.
3. Pull the handle (C2) horizontally away from the tap body (B1).
4. Using a precision screwdriver or similar carefully lever the decorative cap (C3) away from the lock nut (C4).
5. Hold the body of the tap (B1) firmly. Using a suitable tool unscrew the valve lock nut (C4).
6. Pull the old valve cartridge (C5) away from the tap.
7. Ensure that the valve chamber (B1) is clean of dirt and grit.
8. Place the new valve (C5) in the chamber (B1), ensuring the locators on the base of valve (C5) align with the recesses in the chamber of the tap (B1).
9. Reassemble the tap in the reverse order.

To replace the spout O-rings:

1. Loosen grub screw (A9) on the rear of body (B1) using a 2.5mm A/F Allen key.
2. Pull the spout (A4) vertically away from the body (B1).
3. Remove the old O-ring (A6) using a small screwdriver or similar.
4. If worn, remove the white PTFE spacers (A5, A7 & A8).
5. Ensure the inside of the body (B1) and the spout base is clean of dirt and grit with a soft wet cloth.
6. If required locate the new white PTFE spacers (A5, A7 & A8).
7. Carefully locate the new O-ring (A6) onto the spout base (A4).
8. Grease the O-rings thoroughly with silicone or alternative similar grease.
9. Reassemble the tap in the reverse order.

To clean the aerator:

1. Hold the spout (X1) firmly.
2. Unscrew the aerator housing (A1) using an adjustable spanner.
3. Clean the aerator (A2).
4. Reassemble the tap in the reverse order.

To replace the aerator with a flow limited aerator:

1. Remove and dispose of the existing spout grub screw (A9) on the rear of body (B1) using a 2.5mm A/F Allen key.
2. Pull the spout (A4) vertically away from the body (B1).
3. Remove and dispose of the uppermost white PTFE split ring spacer (A5).
4. Add the new replacement PTFE ring (with small spout screw hole) onto the spout.
5. Reassemble the spout ensuring the hole in the new PTFE ring aligns with the hole for the grub screw (A9).
6. Unscrew the aerator housing (A1) using an adjustable spanner.
7. Remove and dispose of the non-flow limited aerator (A2).
8. Insert the new flow limited aerator (A2) into the housing (A1), now screw it back on the tap ensuring to use seal (A3).
9. Reinsert the spout assembly (A4) into the body, note you must rotate and align the small hole in PTFE spacer (A5) with spout screw hole in the rear of the body (B1).
10. Reattach the spout to the body using the new spout grub screw (A9), double check the new spout grub screw (A9) passes into the small hole in PTFE ring (A5).