Puria Aquifier

abode

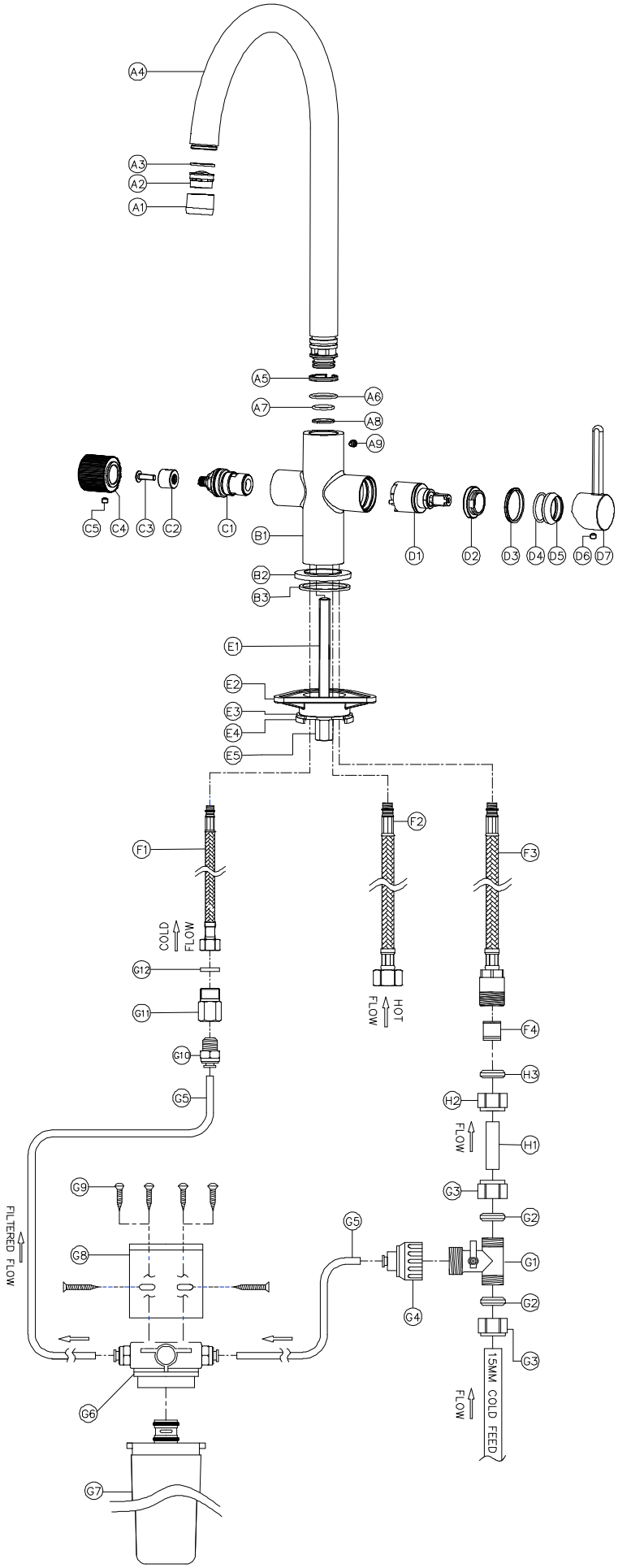

Puria Aquifier

abode

General Advice:

- These instructions are intended as a guide only, if you are in any doubt you should seek the advice of a qualified professional.
- Take care not to mark finished parts with screwdrivers or other tools.
- Use a pair of rubber gloves to get a better grip on decorative hand tight parts.
- Ensure all parts are reassembled tightly.
- After maintenance test that all assemblies are water tight and function correctly.
- Always isolate the hot and cold-water supplies before starting any maintenance, once isolated you should drain any residual water from your system.

To replace the filter valve:

1. Loosen grub screw (C5) on the underside of handle (C4) using a 2.5mm A/F allen key.
2. Pull the handle (C4) horizontally away from the tap body (B1).
3. Unscrew (C3) and pull bush (C2) away from valve (C1).
4. Using a socket unscrew valve (C1) anticlockwise using a 17mm socket or box spanner.
5. Replace the faulty valve (C1) with the new one and assemble in reverse order.

To replace the single lever hot & cold valve:

1. Loosen grub screw (D6) on the underside of handle (D7) using a 2.5mm A/F allen key.
2. Pull the handle (D7) horizontally away from the tap body (B1).
3. Pull away the decorative cover (D5) and internal O-ring (D4) by hand, use a small screwdriver or similar if needed.
4. Pull away indices (D3) away from tap body (B1) by hand, use a small screwdriver or similar if needed.
5. With the tap (B1) fixed to the sink/base unit, using an adjustable spanner unscrew the valve lock nut (D2), it may help to use the spanner “end on”.
6. Clean the inside of chamber (B1) with a soft wet cloth.
7. Replace the faulty valve (D1) with the new one and assemble in reverse order.

To replace the spout O-rings:

1. Loosen grub screw (A9) on the back of body (B1) using an 2.5mm A/F Allen key.
2. Pull the spout (A4) vertically away from the tap body (B1).
3. Remove PTFE rings (A5 & A8) and O-rings (A6 & A7) using a precision screwdriver.
4. Clean the spout base (A4) with a soft wet cloth then replace the new O-rings carefully.
5. Reassemble the tap in reverse order.

Puria Aquifier

abode

To clean the aerator:

1. Hold the spout (A4) firmly.
2. Unscrew the aerator housing (A1) by hand.
3. Clean the aerator (A2).
4. Reassemble the tap in the reverse order, ensure to include seal (A3).

To replace the filter cartridge:

1. Turn off the service valve (G1).
2. Turn on handle (C5) until water no longer exits the spout.
3. Remove filter cartridge (G7) it is a bayonetted fitting, (unscrew ¼ turn and pull down to remove).
4. Remove transport dust cap from new filter (G7).
5. Insert new filter (G7) into the bayonet filter head (G6).
6. Turn on the service valve (G1).
7. Turn on the handle (C5) until water flows, it will take a moment for air to purge, and the water will be discoloured initially because of loose carbon fines, this is harmless and will pass with flushing.
8. Turn the service valve (G1) lever to Adjust flow rate to approximately 1-2 litres per minute.