Specto Single Lever

abode

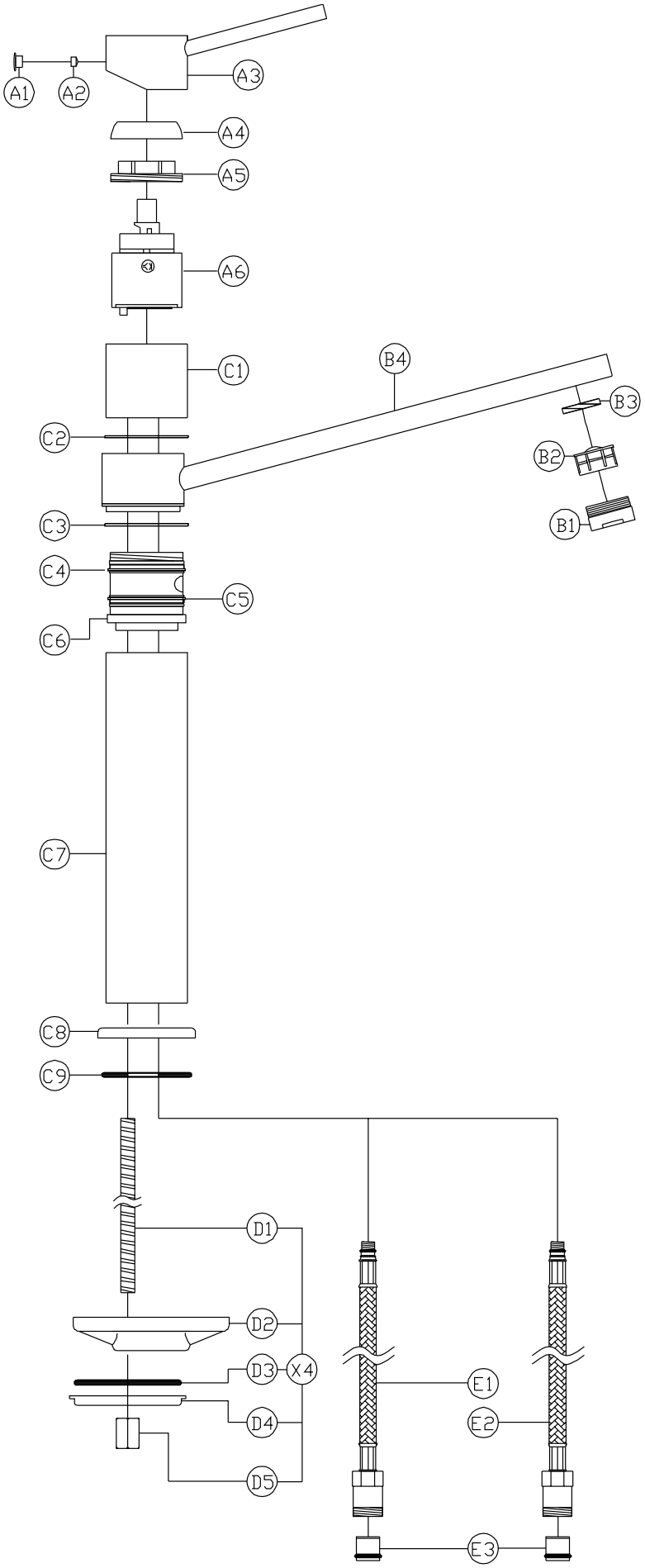

Specto Single Lever

General Advice:

- These instructions are intended as a guide only, if you are in any doubt you should seek the advice of a qualified professional.
- Take care not to mark finished parts with screwdrivers or other tools.
- Use a pair of rubber gloves to get a better grip on decorative hand tight parts.
- Ensure all parts are reassembled tightly.
- After maintenance test that all assemblies are water tight and function correctly.
- Always isolate the hot and cold water supplies before starting any maintenance, once isolated you should drain any residual water from your system.

To replace the valve:

1. Remove the dust cap (A1) with a fingernail or small screwdriver.
2. Loosen grub screw (A2) using a 2.5mm A/F Allen key.
3. Pull the handle (A3) vertically away from the tap.
4. Lever away the decorative cover (A4)
5. Hold the upper body of the tap (C1) firmly. Using an adjustable spanner unscrew the valve lock nut (A5).
6. Pull the old valve cartridge (A6) away from the tap.
7. Ensure that the upper body (C1) is clean of dirt and grit.
8. Place the new valve (A6) in the chamber (C6), ensuring the locators on the base of valve (A6) align with the recesses in the chamber of the tap (C6).
9. Reassemble the tap in the reverse order.

To replace the spout o-rings:

1. This procedure is easiest if the tap is removed from the sink. Remove the lower body (C7) but leave the tail pipes (E1 & E2) attached to body (C6).
2. Follow steps 1-7 of the valve change procedure.
3. With both tail pipes (E1 & E2) clamped or firmly held across both crimpings unscrew the body (C6).
4. Push the spout (B4) upwards and off the body (C6).
5. Remove the old o-rings (C4 & C5) using a small screwdriver or similar. Note the orientation of the o-rings for reassembly.
6. If worn, remove the white PTFE spacers (C2 & C3).
7. Ensure the inside of the spout (B4) and the body (C6) is clean of dirt and grit.
8. If required locate the new white PTFE spacers (C2 & C3).
9. Carefully locate the new O-rings (C4 & C5) onto the body (C6).
10. Grease the O-rings thoroughly with silicone or alternative similar grease.
11. Reassemble the tap in the reverse order.