Coniq-R Monobloc

abode

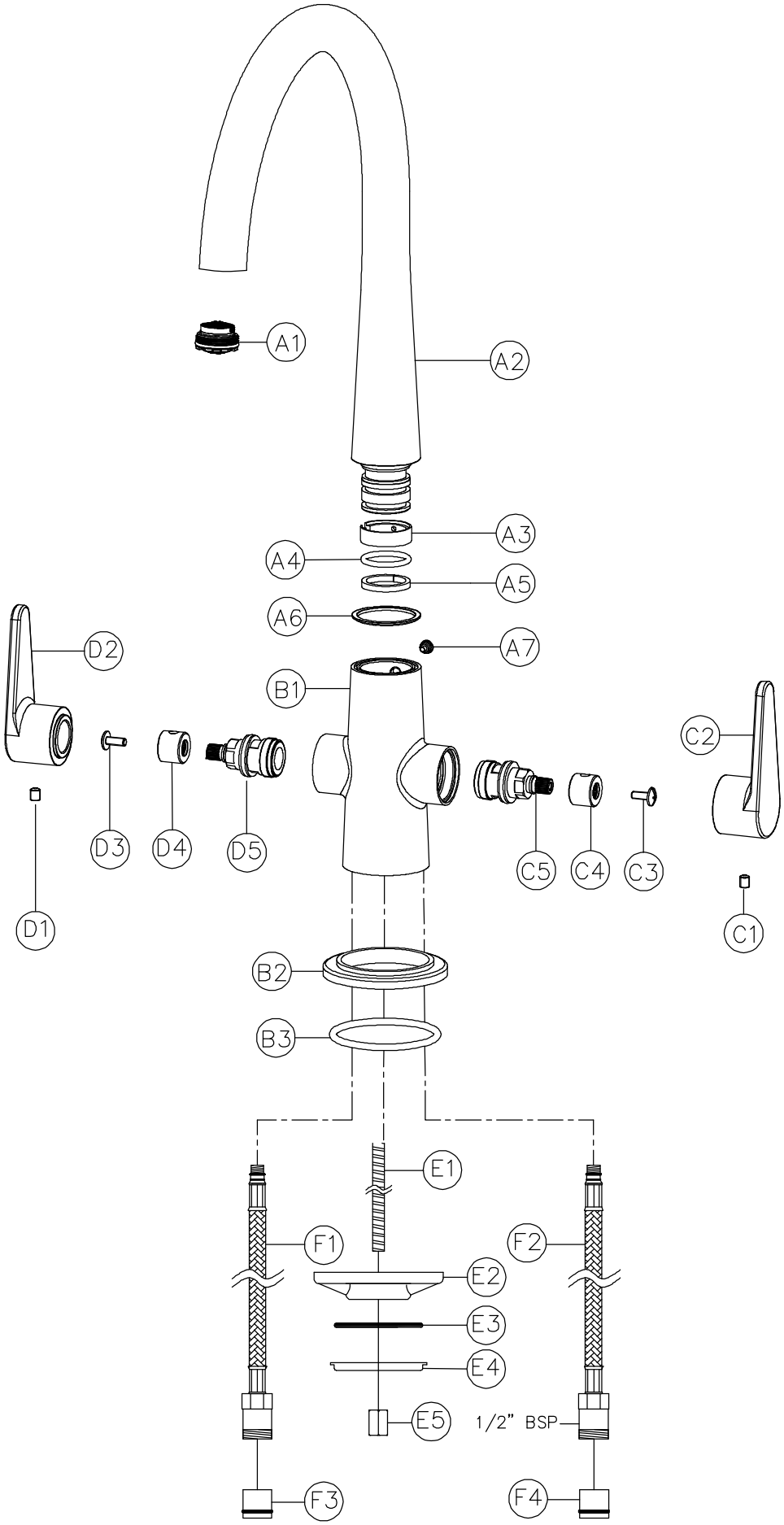

Coniq-R Monobloc

abode

General Advice:

- These instructions are intended as a guide only, if you are in any doubt you should seek the advice of a qualified professional.
- Take care not to mark finished parts with screwdrivers or other tools.
- Use a pair of rubber gloves to get a better grip on decorative hand tight parts.
- Ensure all parts are reassembled tightly.
- After maintenance test that all assemblies are water tight and function correctly.
- Always isolate the hot and cold-water supplies before starting any maintenance, once isolated you should drain any residual water from your system.

To replace the hot valve:

1. Loosen grub screw (D1) on the underside of handle (D2) using a 2.5mm A/F allen key.
2. Pull handle (D2) horizontally away from the body (B1).
3. Unscrew (D3) and pull bush (D4) away from valve (D5).
4. Using a socket unscrew valve (D5) anticlockwise.
5. Replace the faulty valve (D5) with the new one and assemble in reverse order.

To replace the cold valve:

1. Repeat steps 1 to 5 above for the cold valve detailed as (C1 to C5)

To replace the spout o-rings:

1. Loosen grub screw (A7) on the back of body (B1) using a 3mm A/F allen key.
2. Pull the spout (A2) vertically away from the tap body (B1).
3. Remove O-ring (A4) using a precision screwdriver and replace.
4. Clean the spout base (A4) with a soft wet cloth.
5. Replace the O-ring (A4).
6. Typically, the PTFE rings (A3, A5 & A6) do not wear, replace if necessary.
7. Reassemble the tap in reverse order.

Important Note: Top PTFE ring (A3) has a gap; this needs to be aligned with grub screw (A7) during reassembly.

To clean the aerator:

1. Hold the spout (A2) firmly.
2. Unscrew the aerator housing (A1) by hand using a coin.
3. Clean the aerator (A2).
4. Reassemble the tap in the reverse order.