Globe Single Lever Monobloc

abode

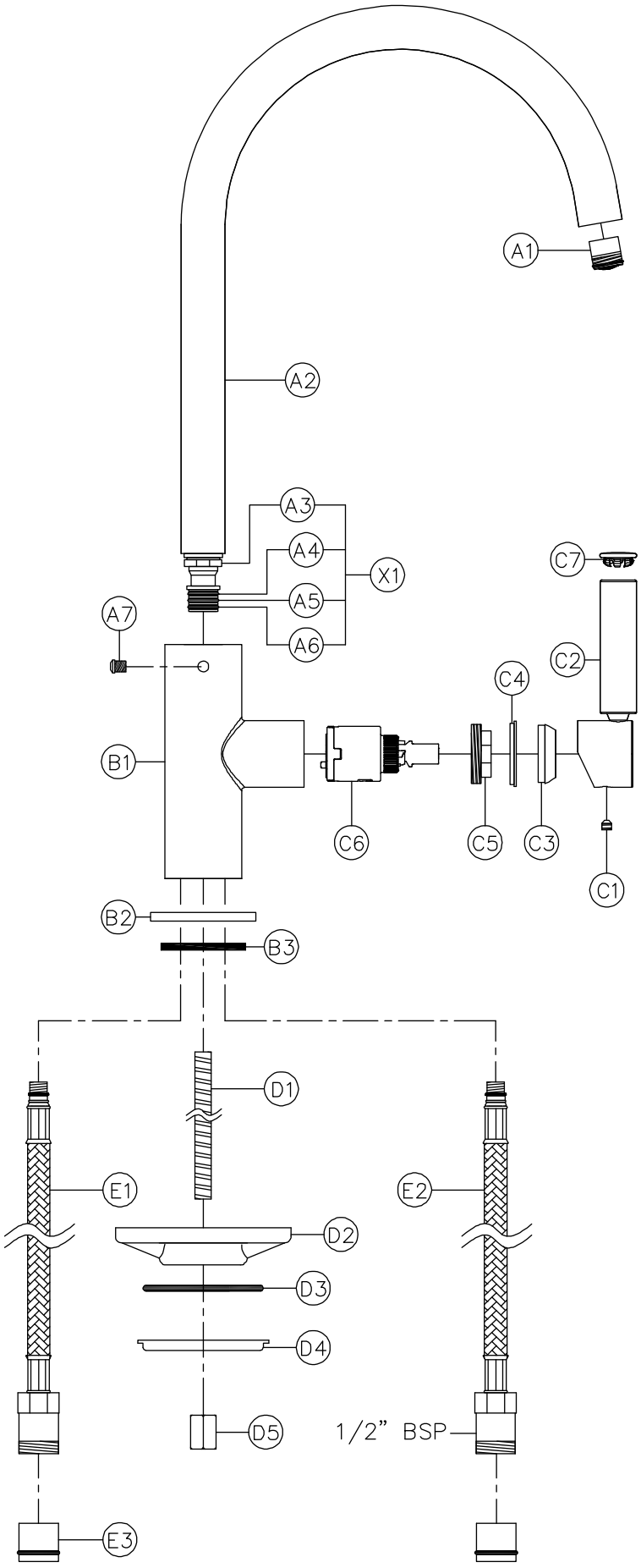

Globe Single Lever Monobloc

abode

General Advice:

- These instructions are intended as a guide only, if you are in any doubt you should seek the advice of a qualified professional.
- Take care not to mark finished parts with screwdrivers or other tools.
- Use a pair of rubber gloves to get a better grip on decorative hand tight parts.
- Ensure all parts are reassembled tightly.
- After maintenance test that all assemblies are water tight and function correctly.
- Always isolate the hot and cold water supplies before starting any maintenance, once isolated you should drain any residual water from your system.

To replace the cold valve:

1. Loosen grub screw (C1) on the underside of handle (C2) using a 2.5mm A/F allen key.

2. Pull the handle (C2) horizontally away from the tap body (B1).

3. Unscrew the decorative cover (C3) and indices (C4) horizontally away from tap body (B1) by hand.

4. With the tap (B1) fixed to the sink/base unit, using an adjustable spanner unscrew the valve lock nut (C5).

5. Clean the Inside of chamber (B1) with a soft wet cloth.

6. Replace the faulty valve (C6) with the new one and assemble in reverse order.

To replace the spout o-rings:

1. Loosen grub screw (A7) on the back of body (B1) using a 2.5mm A/F allen key.

2. Pull the spout (A2) vertically away from the tap body (B1).

3. Remove upper PTFE ring (A3) and O-rings (A4, A5 & A6) using a precision screwdriver and replace with new ones.

4. Reassemble the tap in reverse order.

To clean the aerator:

1. Hold the spout (X1) firmly.

2. Unscrew the aerator (A1) using an aerator key, slotted screwdriver or coin

3. Clean the aerator (A1).

4. Reassemble the tap in the reverse order.

To replace the aerator with a flow limited aerator:

1. Remove and dispose of the existing spout grub screw (A7) on the rear of body (B1) using a 2.5mm A/F allen key.

2. Pull the spout (X1) vertically away from the body (B1).

3. Add the new split PTFE ring (with small spout screw hole) onto the centre of the base of the spout it must be in the orientation (as shown in fig 1.)

4. Unscrew and dispose of the aerator (A1) using an aerator key, slotted screwdriver or coin

5. Insert the new flow limited aerator (A1) into the spout (A2) using an aerator key, slotted screwdriver or coin.

6. Reinsert the spout assembly (X1) into the body, note you must rotate and align the small hole in the additional new PTFE spacer with spout screw hole in the rear of the body (B1) as shown on fig 1.

7. Reattach the spout to the body using the new spout grub screw (A7), double check the new spout grub screw (A7) passes into the small hole in the new PTFE ring (see fig 1.).

Standard product (as supplied)

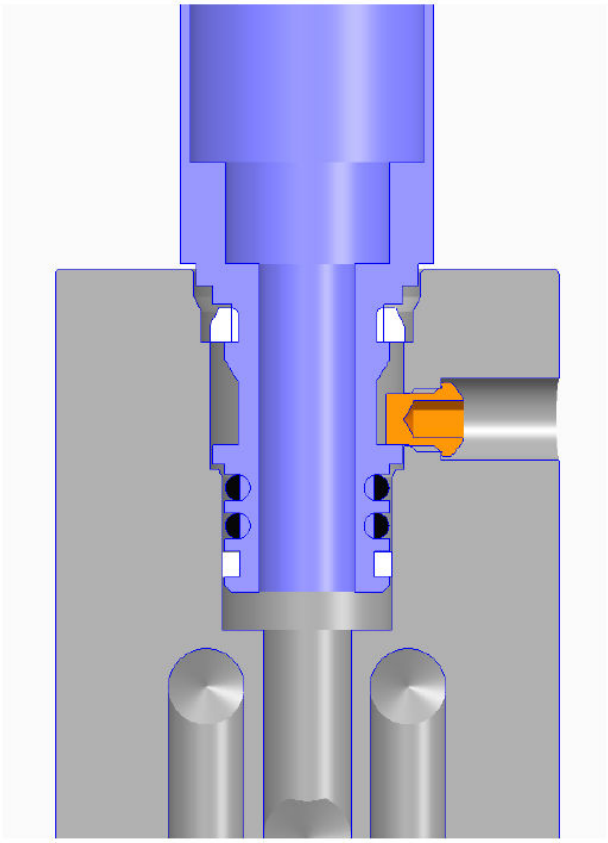

Modified product (with flow limited aerator)

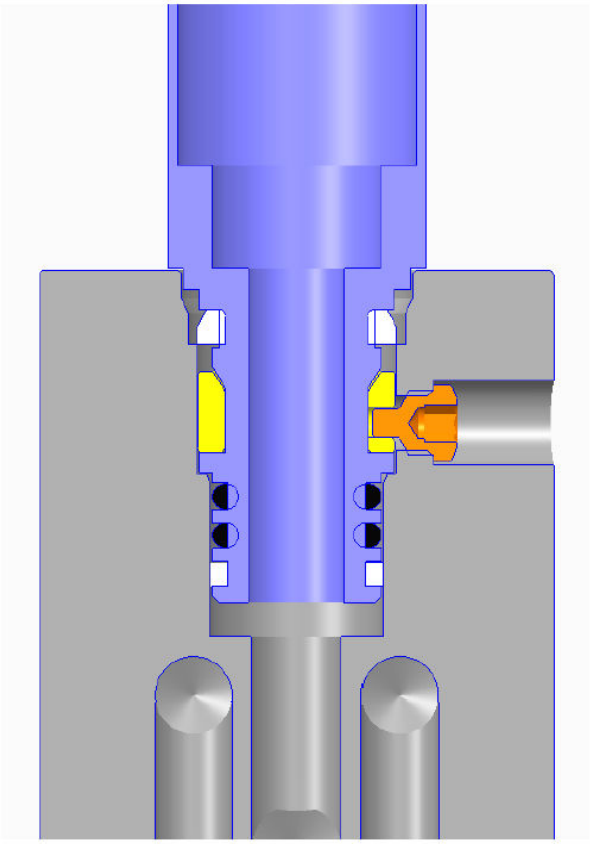

Fig. 1