Hex Bridge Pull Out

abode

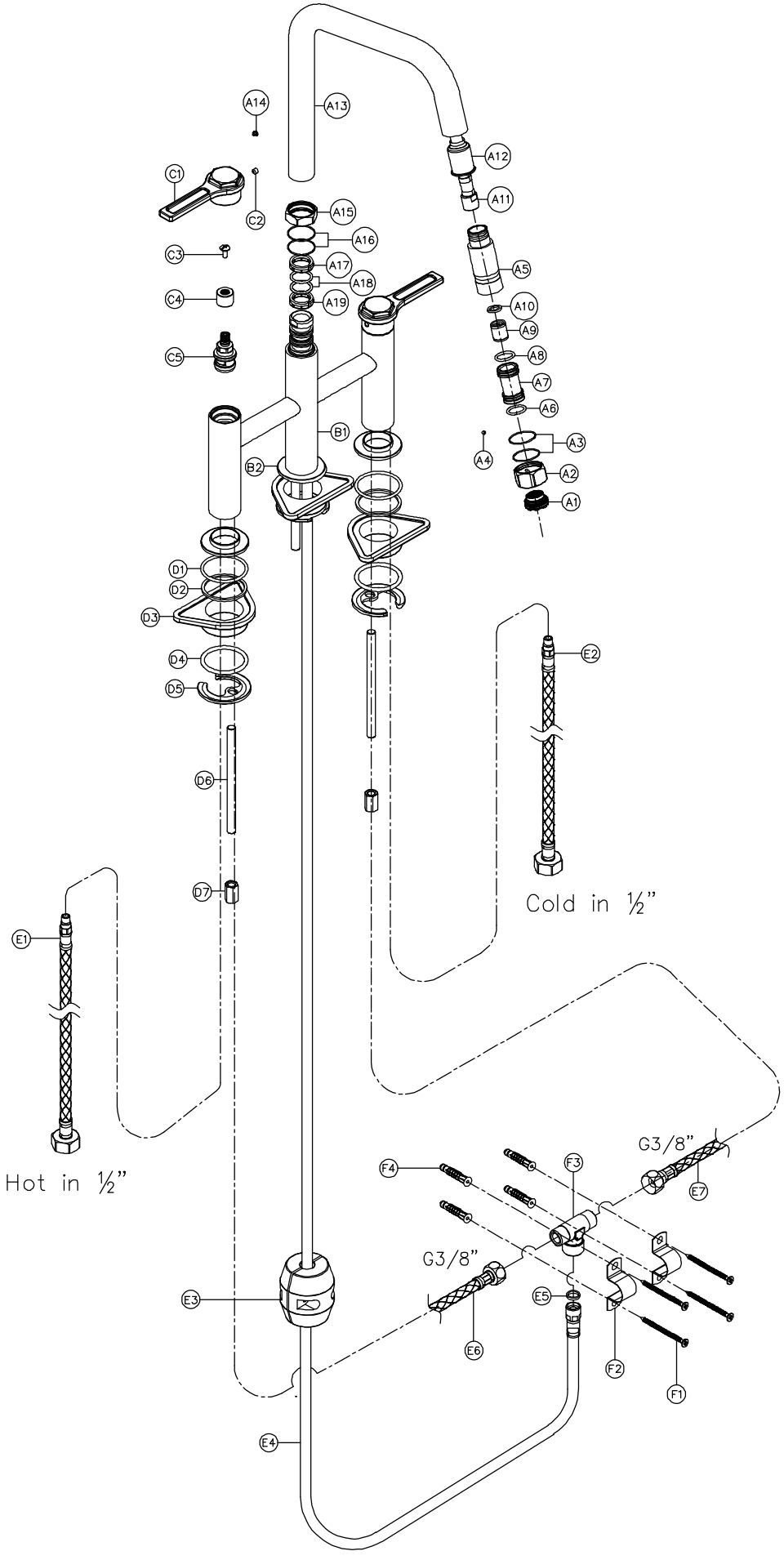

Hex Bridge Pull Out

General Advice:

- These instructions are intended as a guide only, if you are in any doubt you should seek the advice of a qualified professional.
- Take care not to mark finished parts with screwdrivers or other tools.
- Use a pair of rubber gloves to get a better grip on decorative hand tight parts.
- Ensure all parts are reassembled tightly.
- After maintenance test that all assemblies are water tight and function correctly.
- Always isolate the hot and cold-water supplies before starting any maintenance, once isolated you should drain any residual water from your system.

To replace the cold valve:

1. Loosen grub screw (C2) on the back of the handle (C1) using a 2.5mm A/F Allen key.
2. Pull the handle (C1) vertically away from the tap body (B1).
3. Remove screw (C3) and bush (C4) vertically.
4. Using a socket remove the valve (C5).
5. Clean the Inside of chamber (B1) with a soft wet cloth.
6. Replace the faulty valve (C5) with the new one and assemble in reverse order.

To clean the aerator:

1. Hold the spray head (A5) firmly.
2. Unscrew the aerator (A1) using a coin.
3. Extract the aerator (A1) and clean.
4. Reassemble the aerator in the reverse order