ACT3113-17 – Logik Single Lever Pull Out

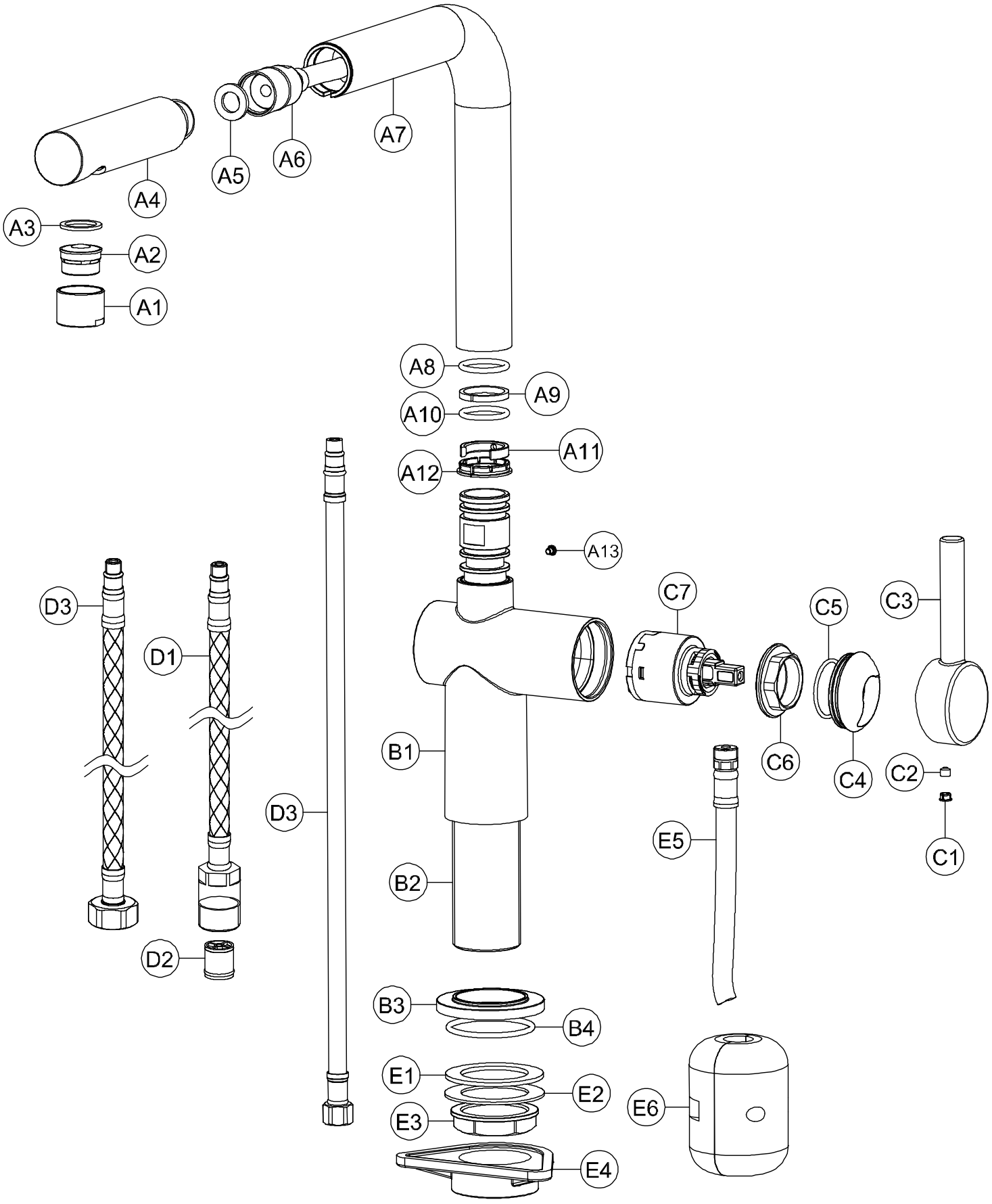

ACT3113-17 – Logik Single Lever Pull Out

General Advice:

- These instructions are intended as a guide only, if you are in any doubt you should seek the advice of a qualified professional.
- Take care not to mark finished parts with screwdrivers or other tools.
- Use a pair of rubber gloves to get a better grip on decorative hand tight parts.
- Ensure all parts are reassembled tightly.
- After maintenance test that all assemblies are water tight and function correctly.
- Always isolate the hot and cold water supplies before starting any maintenance, once isolated you should drain any residual water from your system.

To replace the valve:

1. Remove dust cap (**C1**) and loosen grub screw (**C2**) on the underside of handle (**C3**) using an 2.5mm A/F Allen key.
2. Pull the handle (**C3**) horizontally away from the tap body (**B1**).
3. Pull decorative cover (**C4**) horizontally away from tap body (**B1**) by hand.
4. O-ring (**C5**) should be attached to decorative cover (**C4**).
5. With the tap (**B1**) fixed to the sink/base unit, use a standard 27mm socket to unscrew the valve lock nut (**C6**).
6. Clean the Inside of chamber (**B1**) with a soft wet cloth.
7. Replace the faulty valve (**C7**) with the new one and assemble in reverse order.

To clean the aerator:

1. Hold the spray head (**A4**) firmly.
2. Unscrew the aerator housing (**A1**).
3. Extract the aerator (**A2**) and clean.
4. Reassemble the aerator in the reverse order, ensure flat rubber washer (**A3**) is in place during reassembly.

To replace the spout O-rings:

1. Loosen grub screw (**A5**) on the rear of body (**B1**) using a 2.5mm A/F Allen key.
2. Pull the spout (**A4**) vertically away from the body (**B1**).
3. Remove the old O-rings (**A6** & **A8**) using a small screwdriver or similar.
4. If worn, remove the white PTFE spacer (**A7** & **A9**).
5. Ensure the inside of the body (**B1**) and the spout base is clean of dirt and grit with a soft wet cloth.
6. If required locate the new white PTFE spacer (**A7** & **A9**).
7. Carefully locate the new O-rings (**A6** & **A8**) onto the spout base (**A4**).
8. Grease the O-rings (**A6** & **A8**) thoroughly with silicone or alternative similar grease.
9. Reassemble the tap in the reverse order.