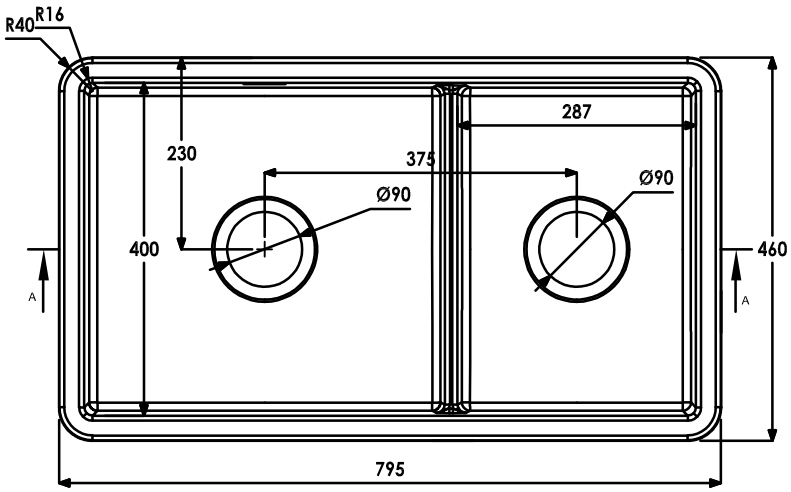

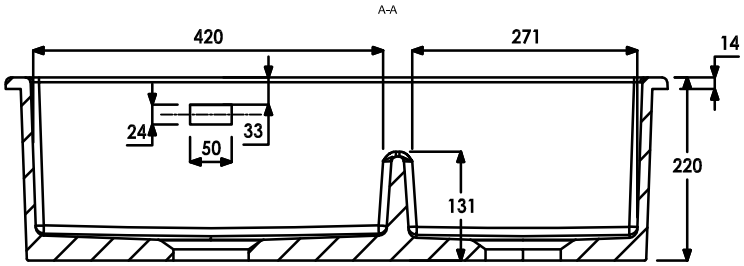

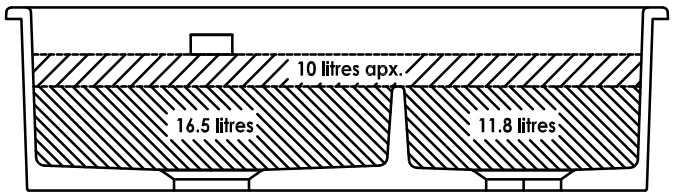

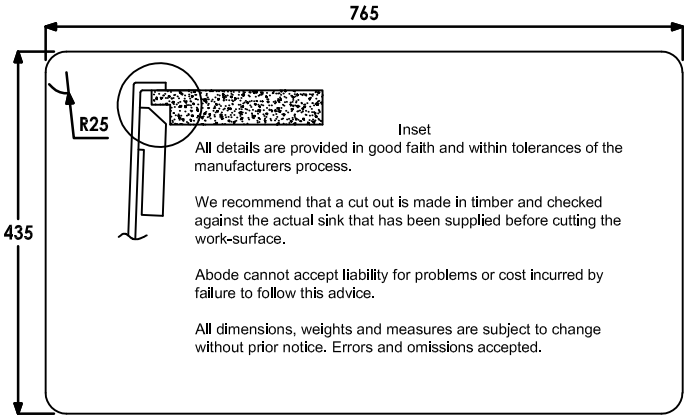

Inset

All details are provided in good faith and within tolerances of the manufacturers process.

We recommend that a cut out is made in timber and checked against the actual sink that has been supplied before cutting the work-surface.

Abode cannot accept liability for problems or cost incurred by failure to follow this advice.

All dimensions, weights and measures are subject to change without prior notice. Errors and omissions accepted.

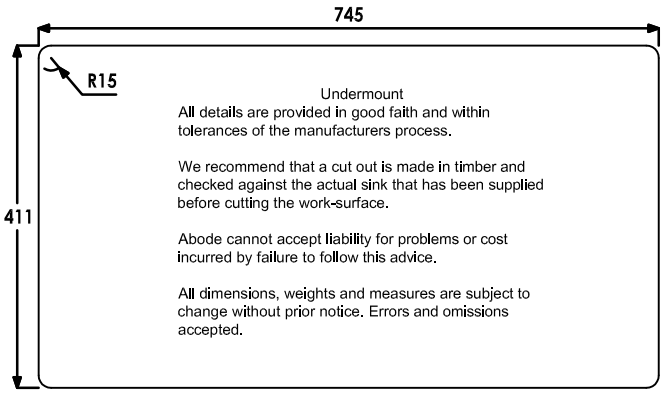

Undermount

All details are provided in good faith and within tolerances of the manufacturers process.

We recommend that a cut out is made in timber and checked against the actual sink that has been supplied before cutting the work-surface.

Abode cannot accept liability for problems or cost incurred by failure to follow this advice.

All dimensions, weights and measures are subject to change without prior notice. Errors and omissions accepted.