TAP3521-1 & TAP3531-1 – Garda Swan Neck Monobloc

Key:	Description:	APX size (mm):	Base material:	Colour:	QTY:
A1	Aerator housing	M22 F	Brass	Chrome	1
A2	Aerator	Neoperl Honeycomb	Plastic	Blue/Grey	1
A3	Rubber gasket	21 OD	Rubber	Black	1
A4	Spout	324 x 235	Brass	Chrome	1
A5	Anti friction split ring	24 OD	Plastic	White	1
A6	O-ring	23 OD	Rubber	Black	1
A7	O-ring	19 OD	Rubber	Black	1
A8	Spout grub screw	M5	Brass	Brass	1
B1	Body	52 DIA x 83	Brass	Chrome	1
B2	Upper seal	51 OD	Rubber	Black	1
B3	Hot valve seat	29 DIA x 20	Brass	Brass	1
B4	Cold valve seat	29 DIA x 20	Brass	Brass	1
C1	Cold valve	½" CD, length 53mm	Brass	Brass	1
C2	Valve cover	30 DIA x 37	Brass	Chrome	1
C3	Grub screw	M4 x 5	Metal	Silver	1
C4	Handle	91 x 21	Mazak	Chrome	1
D1	Hot valve	½" CD, length 53mm	Brass	Brass	1
D2	Valve cover	30 DIA x 37	Brass	Chrome	1
D3	Grub screw	M3 x 5	Steel	Silver	1
D4	Handle	91 x 21	Mazak	Chrome	1
E1	Fixing stud	M8 x 120	Metal	Silver	1
E2	Stabiliser plate	88 x 58	Plastic	White	1
E3	Lower gasket	45 OD	Rubber	Black	1
E4	Metal horseshoe	51 x 5	Metal	Silver	1
E5	Fixing nut	65 x 11 AF	Brass	Brass	1
F1	Hot flexi tail pipe	½" BSP female x M12 x 255mm	Rubber/Brass/Inox	Silver/Red	1
F2	Cold flexi tail pipe	½" BSP female x M12 x 255mm	Rubber/Brass/Inox	Silver/Blue	1
X1	Spout o-ring assembly	N/A	N/A	N/A	1

© Abode Home Products Limited

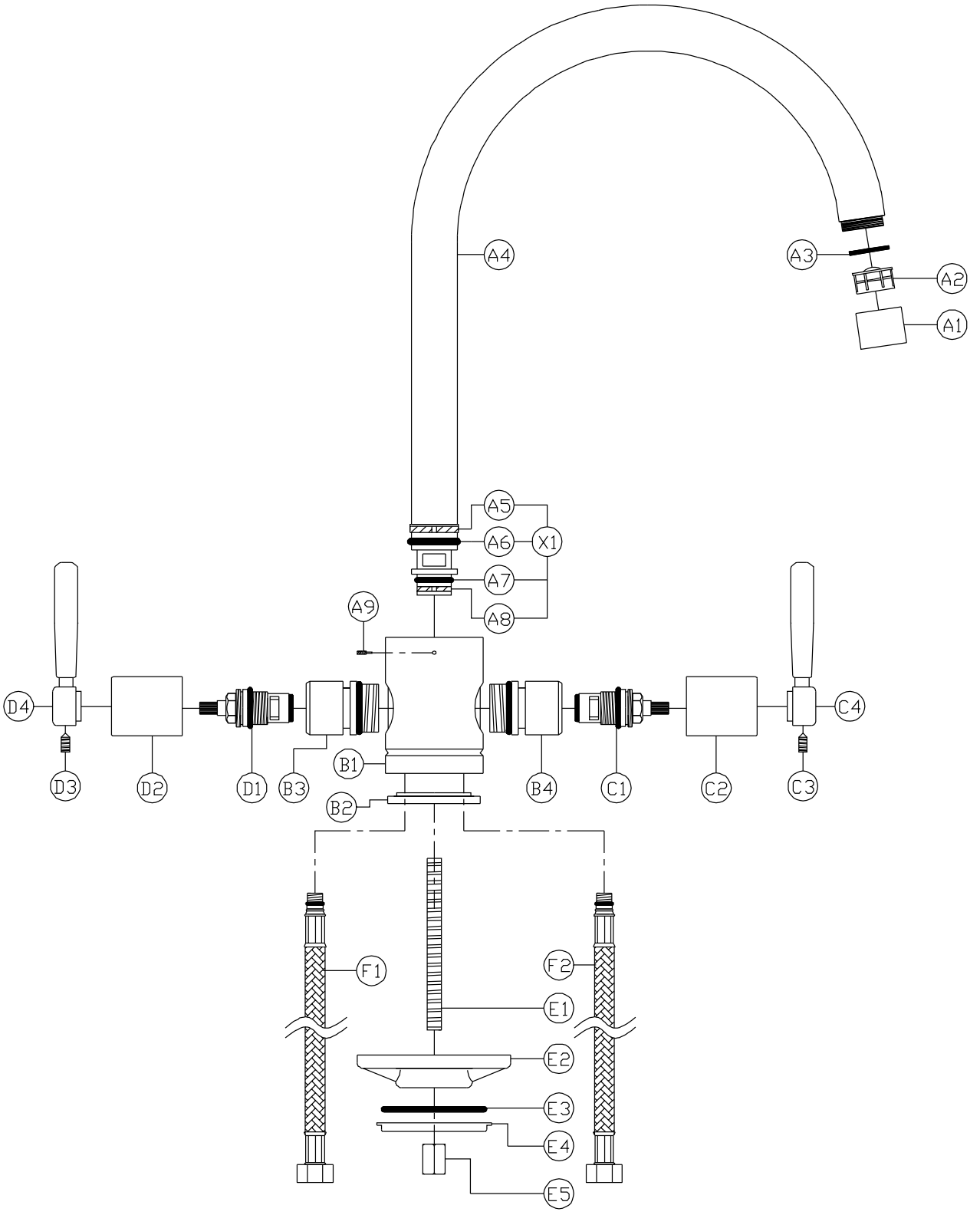

LAMONA
Exclusive to Howdens Joinery Co.

TAP3521/3531-1
Swan neck monobloc
service drawing v3

(c) abode home products ltd
www.abode.eu

our policy is to continually Improve and develop products, and accordingly we reserve the right to amend specifications without prior notice

© Abode Home Products Limited

General Advice:

- These instructions are intended as a guide only, if you are in any doubt you should seek the advice of a qualified professional.
- Take care not to mark finished parts with screwdrivers or other tools.
- Use a pair of rubber gloves to get a better grip on decorative hand tight parts.
- Ensure all parts are reassembled tightly.
- After maintenance test that all assemblies are water tight and function correctly.
- Always isolate the hot and cold water supplies before starting any maintenance, once isolated you should drain any residual water from your system.

To replace the hot valve:

1. Loosen grub screw (D3) on the underside of handle (D4) using a 2mm A/F allen key.
2. Pull the handle (D4) horizontally away from the tap. Note: a plastic spacer may come out with the handle, if so replace when reassembling.
3. Unscrew the valve cover (D2) by hand, if necessary use a pair of rubber gloves to get a better grip.
4. Hold the body of the tap (B1) firmly. Using an adjustable or 17mm ring spanner unscrew the valve (D1).
5. Clean the Inside of chamber (B3) with a soft wet cloth.
6. Reassemble the tap in the reverse order.

To replace the spout o-rings:

1. Loosen grub screw (A9) on the rear of body (B1) using a 2.5mm A/F allen key.
2. Pull the spout (A4) vertically away from the body (B1).
3. Remove the old o-rings (A6 & A7) using a small screwdriver or similar.
4. If worn, remove the white PTFE spacer (A5 & A8).
5. Ensure the inside of the body (B1) and the spout base is clean of dirt and grit with a soft wet cloth.
6. If required locate the new white PTFE spacer (A5 & A8).
7. Carefully locate the new O-rings (A6 & A7) onto the spout base (A4).
8. Grease the O-rings (A6 & A7) thoroughly with silicone or alternative similar grease.
9. Reassemble the tap in the reverse order.

© Abode Home Products Limited