TAP3581 – Como Monobloc

Key:	Description:	APX size (mm):	Base material:	Colour:	QTY:
A1	Aerator	14.5 x 7.5	Plastic	Grey	1
A2	Tubular Spout	240 x 205	Brass	Chrome	1
A3	Anti friction split ring	24 OD x 2.5	PTFE	White	1
A4	O-ring	1.7 x 21	Rubber	Black	1
A5	O-ring	1.7 x 21	Rubber	Black	1
A6	Spout grub screw	M5 x 6	Brass	Brass	1
B1	Body	90 x 58	Brass	Chrome	1
B2	Base plinth	58 x 48 x 5	Brass	Chrome	1
B3	Upper seal	42 x 2	Rubber	White	1
C1	Cold handle & grub screw	71 x 30 x 20	Brass	Chrome	1
C2	Anti friction ring	81 x 3	PTFE	White	1
C3	Cold valve	M20 x 38	Brass	Brass	1
D1	Hot handle & grub screw	71 x 30 x 20	Brass	Chrome	1
D2	Anti friction ring	81 x 3	PTFE	White	1
D3	Hot valve	M20 x 38	Brass	Brass	1
E1	Fixing stud	M8 x 95	Steel	Silver	1
E2	Stabiliser plate	88 x 58	Plastic	White	1
E3	Lower gasket	45 OD x 3.5	Rubber	Black	1
E4	Metal horseshoe	51 x 5	Steel	Silver	1
E5	Fixing nut	18 x 11 AF	Brass	Brass	1
F1	Hot flexible pipe	M12 x 260 x ½" BSP M	Stainless steel/Brass	Silver/red	1
F2	Cold flexible pipe	M12 x 260 x ½" BSP M	Stainless steel/Brass	Silver/blue	1
F3	Non return valve	16 x 14	Plastic	White	1
X1	Spout o-ring assembly	N/A	N/A	N/A	1

© Abode Home Products Limited

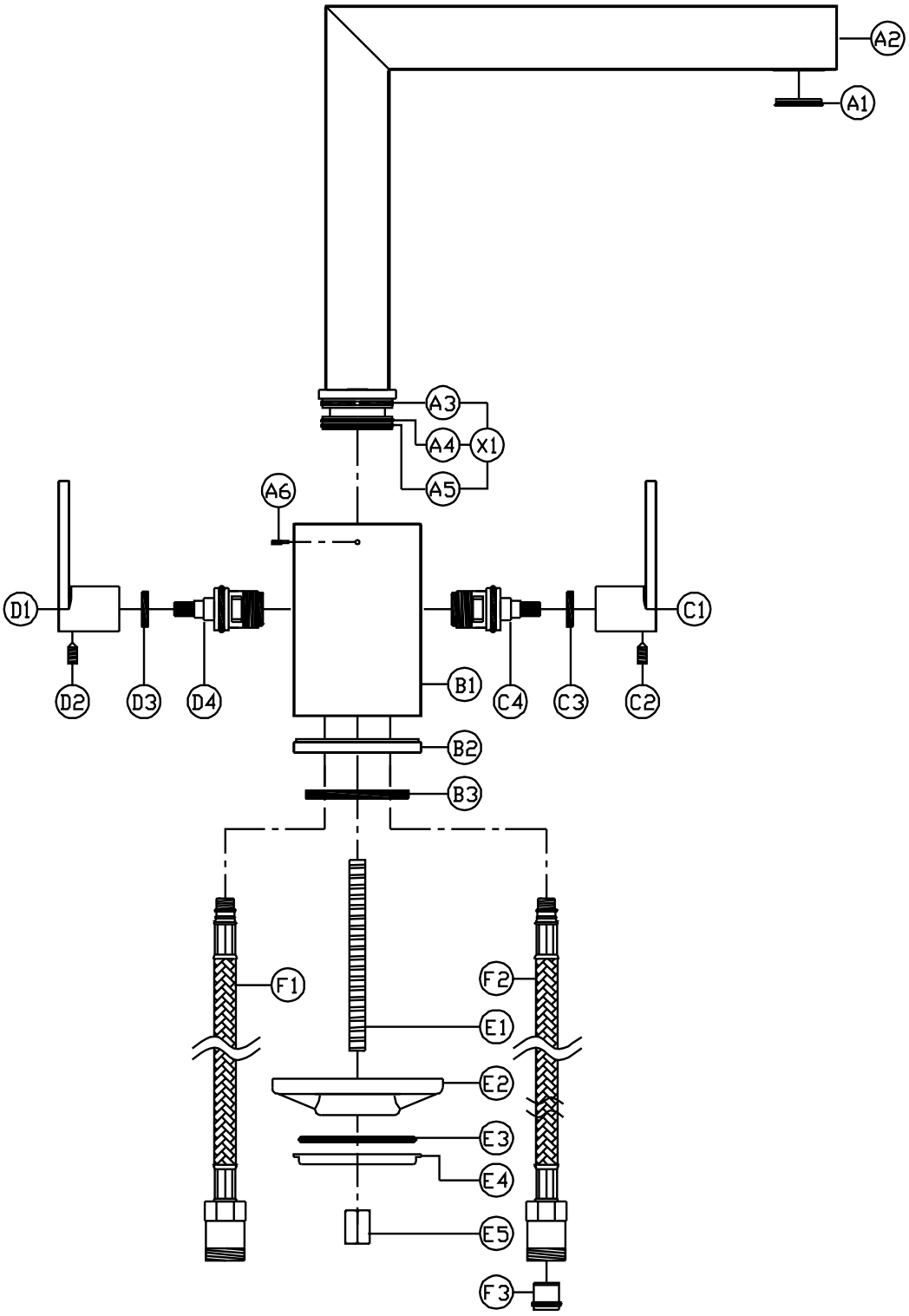

HOWDENS JOINERY CO.

TAP3581 Como monobloc
service drawing v1

(c) abode home products ltd
www.abode.eu

our policy is to continually improve and develop products, and accordingly we reserve the right to amend specifications without prior notice

© Abode Home Products Limited

General Advice:

- These instructions are intended as a guide only, if you are in any doubt you should seek the advice of a qualified professional.
- Take care not to mark finished parts with screwdrivers or other tools.
- Use a pair of rubber gloves to get a better grip on decorative hand tight parts.
- Ensure all parts are reassembled tightly.
- After maintenance test that all assemblies are water tight and function correctly.
- Always isolate the hot and cold water supplies before starting any maintenance, once isolated you should drain any residual water from your system.

To replace the hot valve:

1. Loosen grub screw (D2) on the underside of handle (D1) using a 2mm A/F allen key.
2. Pull the handle (D1) horizontally away from the tap. Note the plastic spacer (D3) may come out with the handle, if so replace this when reassembling.
3. Hold the body of the tap (B1) firmly. Using an adjustable or 12mm open spanner unscrew the valve (D4).
4. Clean the Inside of chamber (B1) with a soft wet cloth.
5. Reassemble the tap in the reverse order.

To replace the spout o-rings:

1. Loosen grub screw (A6) on the rear of body (B1) using a 2.5mm A/F allen key.
2. Pull the spout (A2) vertically away from the body (B1).
3. Remove the old o-rings (A4 & A5) using a small screwdriver or similar.
4. If worn, remove the white PTFE spacer (A3).
5. Ensure the inside of the body (B1) and the spout base is clean of dirt and grit with a soft wet cloth.
6. If required locate the new white PTFE spacer (A3).
7. Carefully locate the new O-rings (A4 & A5) onto the spout base (A2).
8. Grease the O-rings thoroughly with silicone or alternative similar grease.
9. Reassemble the tap in the reverse order.

© Abode Home Products Limited