HOLKHAM Single Lever Pull Out Tap
TAP3605, TAP3680, TAP3681

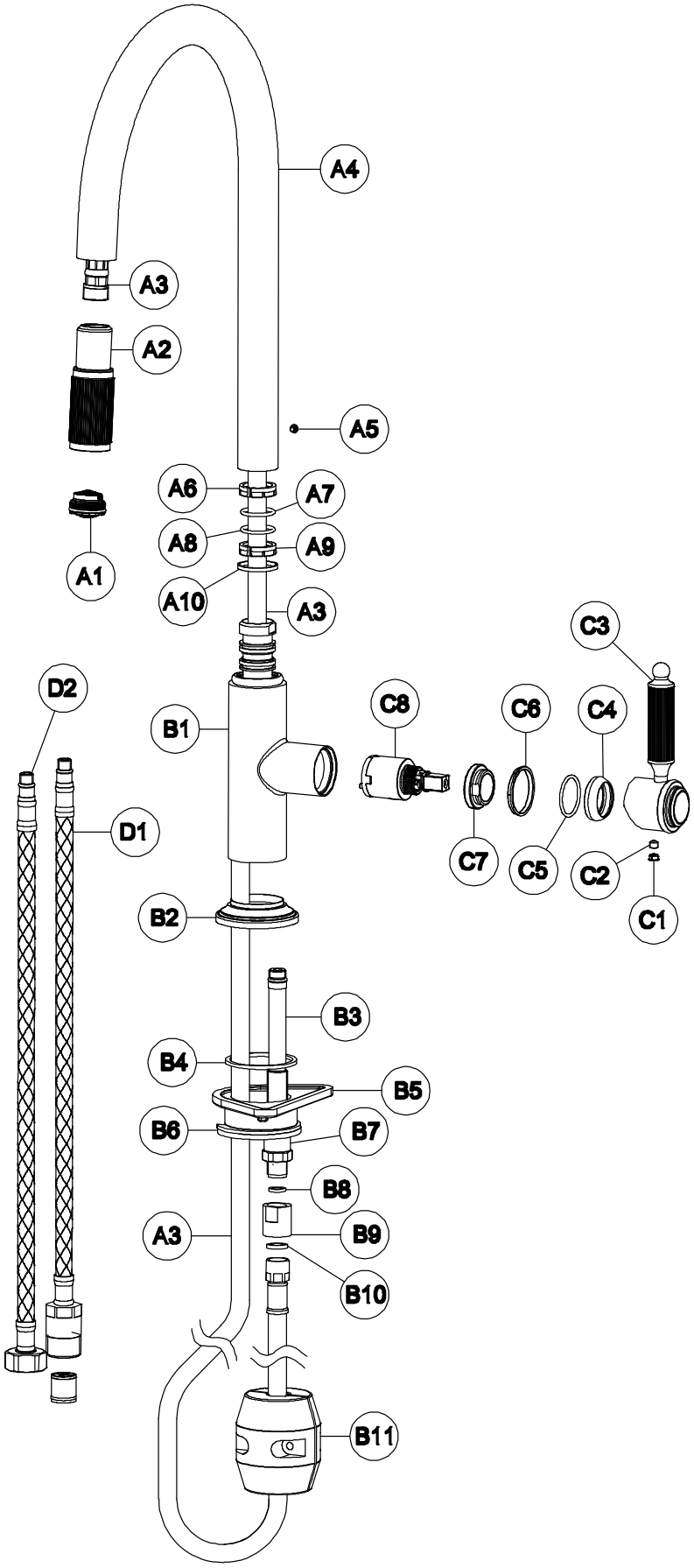

HOLKHAM Single Lever Pull Out Tap
TAP3605, TAP3680, TAP3681

General Advice:

- These instructions are intended as a guide only, if you are in any doubt, you should seek the advice of a qualified professional.
- Take care not to mark finished parts with screwdrivers or other tools.
- Use a pair of rubber gloves to get a better grip on decorative hand tight parts.
- Ensure all parts are reassembled tightly.
- After maintenance test that all assemblies are watertight and function correctly.
- Always isolate the hot and cold-water supplies before starting any maintenance, once isolated you should drain any residual water from your system.

To replace a valve:

1. Using a precision screwdriver remove decorative cover (C1).
2. Loosen grub screw (C2) using a 2.5mm A/F allen key.
3. Pull control handle (C3) away from the body (B1).
4. Using a precision screwdriver remove decorative cover (C4).
5. Remove the indices ring (C6).
6. Using a 20mm open end spanner or adjustable spanner remove valve retaining nut (C7).
7. Remove old valve (C8) and replace with the new one – note the orientation of the locating lugs on the bottom of the valve and ensure they align with the holes inside the valve body (B1).
8. Assemble in reverse order.

To clean the aerator:

1. Hold the spout head (A2) firmly.
2. Using a small coin remove the aerator (A1).
3. Clean the aerator.
4. Reassemble in reverse order.