TAP6106 - Sennen Single Lever Pull Out

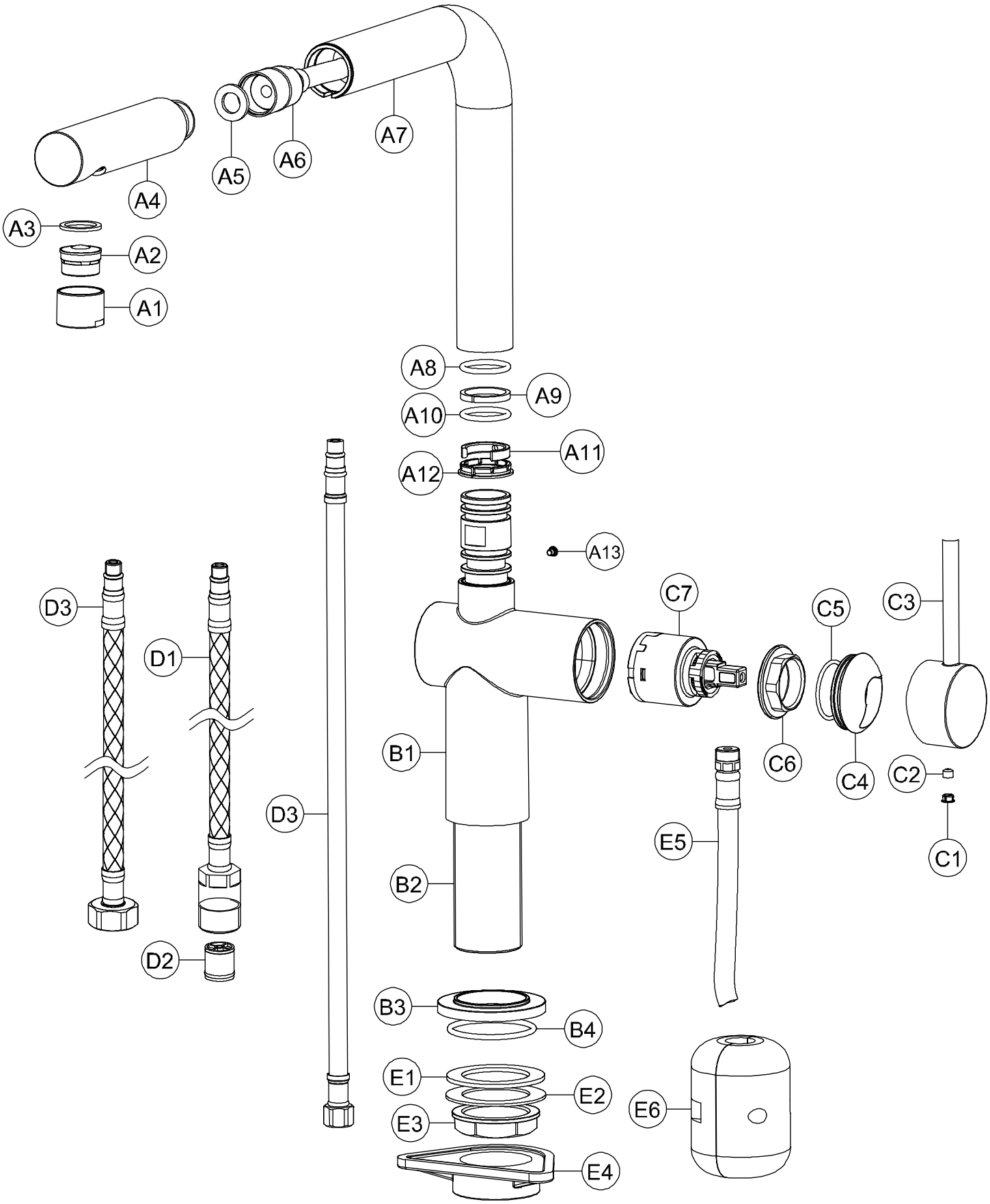

© Abode Home Products Limited

TAP6106 - Sennen Single Lever Pull Out

General Advice:

- These instructions are intended as a guide only, if you are in any doubt, you should seek the advice of a qualified professional.
- Take care not to mark finished parts with screwdrivers or other tools.
- Use a pair of rubber gloves to get a better grip on decorative hand tight parts.
- Ensure all parts are reassembled tightly.
- After maintenance test that all assemblies are water tight and function correctly.
- Always isolate the hot and cold-water supplies before starting any maintenance, once isolated you should drain any residual water from your system.

To replace the valve:

1. Remove dust cap (C1) and loosen grub screw (C2) on the underside of handle (C3) using an 2.5mm A/F Allen key.
2. Pull the handle (C3) horizontally away from the tap body (B1).
3. Pull decorative cover (C4) horizontally away from tap body (B1) by hand.
4. O-ring (C5) should be attached to decorative cover (C4).
5. With the tap (B1) fixed to the sink/base unit, use a standard 27mm socket to unscrew the valve lock nut (C6).
6. Clean the Inside of chamber (B1) with a soft wet cloth.
7. Replace the faulty valve (C7) with the new one and assemble in reverse order.

To clean the aerator:

1. Hold the spray head (A4) firmly.
2. Unscrew the aerator housing (A1).
3. Extract the aerator (A2) and clean.
4. Reassemble the aerator in the reverse order, ensure flat rubber washer (A3) is in place during reassembly.

To replace the spout O-rings:

1. Loosen grub screw (A5) on the rear of body (B1) using a 2.5mm A/F Allen key.
2. Pull the spout (A4) vertically away from the body (B1).
3. Remove the old O-rings (A6 & A8) using a small screwdriver or similar.
4. If worn, remove the white PTFE spacer (A7 & A9).
5. Ensure the inside of the body (B1) and the spout base is clean of dirt and grit with a soft wet cloth.
6. If required locate the new white PTFE spacer (A7 & A9).
7. Carefully locate the new O-rings (A6 & A8) onto the spout base (A4).
8. Grease the O-rings (A6 & A8) thoroughly with silicone or alternative similar grease.
9. Reassemble the tap in the reverse order.

© Abode Home Products Limited