TAP8360 PORLOCK Single Lever Pull Out

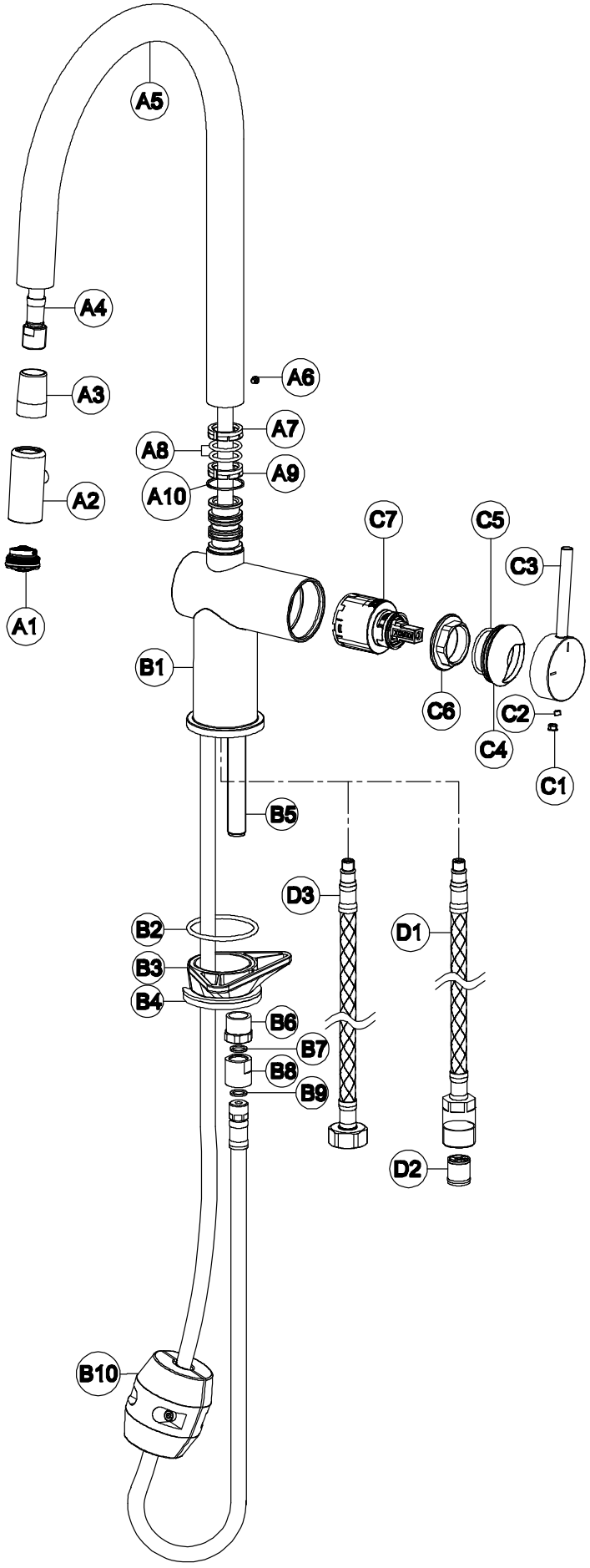

© Abode Home Products Limited **

TAP8360 PORLOCK Single Lever Pull Out

General Advice:

- These instructions are intended as a guide only, if you are in any doubt you should seek the advice of a qualified professional.
- Take care not to mark finished parts with screwdrivers or other tools.
- Use a pair of rubber gloves to get a better grip on decorative hand tight parts.
- Ensure all parts are reassembled tightly.
- After maintenance test that all assemblies are water tight and function correctly.
- Always isolate the hot and cold-water supplies before starting any maintenance, once isolated you should drain any residual water from your system.

To replace the cold valve:

1. Remove dust cap (C1) and loosen grub screw (C2) on the underside of handle (C3) using an 2mm A/F Allen key.
2. Pull the handle (C3) horizontally away from the tap body (B1).
3. Pull decorative cover (C4) horizontally away from tap body (B1) by hand.
4. O-ring (C5) should be attached to decorative cover (C4).
5. With the tap (B1) fixed to the sink/base unit, use a standard 27mm socket to unscrew the valve lock nut (C6).
6. Clean the Inside of chamber (B1) with a soft wet cloth.
7. Replace the faulty valve (C7) with the new one and assemble in reverse order.

To clean the aerator:

1. Hold the spray head (A2) firmly.
2. Using a small coin unscrew the aerator (A1).
3. Extract the aerator (A1) and clean.
4. Reassemble the aerator in the reverse order.

To replace the assembled spray head:

1. Hold the spray head (A2) firmly.
2. Unscrew the decorative housing (A3).
3. Using a small adjustable spanner unscrew the brass swivel threaded bar (A4) in an anti-clockwise direction whilst holding spray head (A2).
4. Reassemble in reverse order.

© Abode Home Products Limited **