GARDA DUAL LEVER

TAP6140

Info for the Installer

03-26

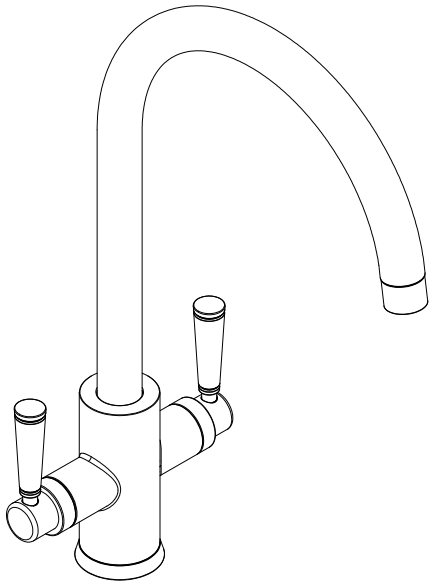

Installation Preparation:

Inspect all parts for damage and completeness before installation.

MUST flush the supply pipes before installing the tap.

Failure to flush can damage the cartridge and invalidate the warranty.

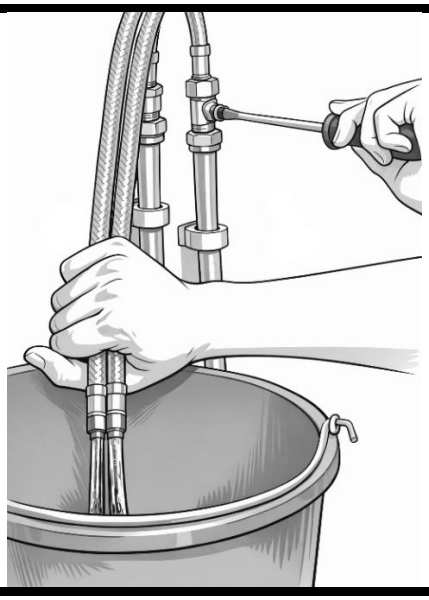

Check the available water pressure is sufficient and not excessive.

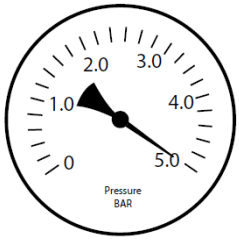

Best practice:



- Fit isolation valves and mesh filters to both hot and cold supplies in an accessible position.
  This helps prevent premature valve failure and allows easier maintenance.

- Non return (check) valves may be needed, check the technical data and parts and contents table.

- If replacing a tap, remove it and clean the pipe ends. Ensure the tap hole area is clean and free from sealant.

- Check the tap will fit the mounting depth and reach the outlet position before installation.

- Requires a Ø35 mm tap hole.

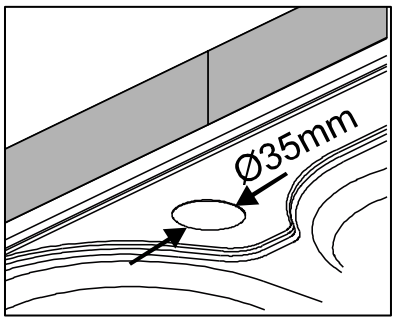

- Loosely position the tap and tails to check pipe alignment.

- Modify pipework if required before final fitting.

- Check rear movement of handles

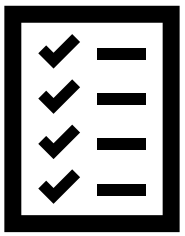

Technical Data:

Minimum operating pressure: **0.3 bar**	Maximum hot water temperature: **70°C***
Maximum operating pressure: **5.5 bar***	Recommended hot water temperature: **46°C**
Flow characteristics: Dual **flow**	

*If these temperatures or pressures are exceeded, even for short periods, damage can result. In these instances, a thermostatic mixing or pressure reducing valve should be installed.

Flexible Hose Installation – MUST Follow

Failure to follow these instructions will invalidate the warranty.

Before fitting, check the hose is correctly crimped at both ends beyond the braided section of the hoses.

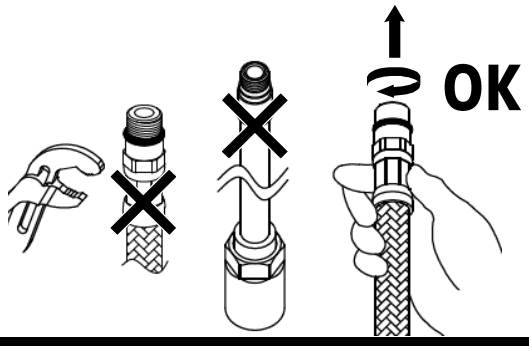

- You **MUST** only hand-tighten flexi hoses into the tap body.
- DO NOT use a spanner on the tap connection.
- Always use the pipes provided.

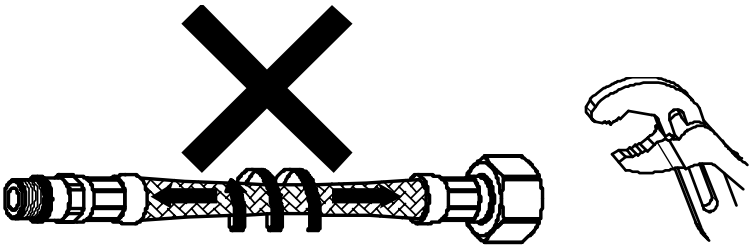

- Never twist or stretch the flexible hose during installation.
- Do not overtighten the hexagonal end of the hose when using a spanner causing the hose to twist.

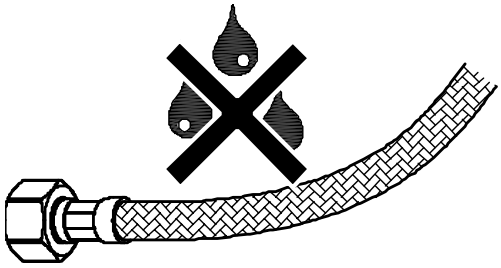

- The braiding on the flexible hose must not be in contact with any scarcely aggressive chemicals, internal or external room walls or dissimilar metals or materials.

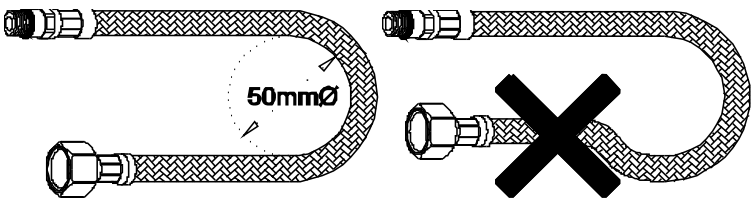

- Observe the minimum bend radius of **50mm**, hoses **MUST not be kinked or looped.**
- Hoses must not be double bent in multiple directions.

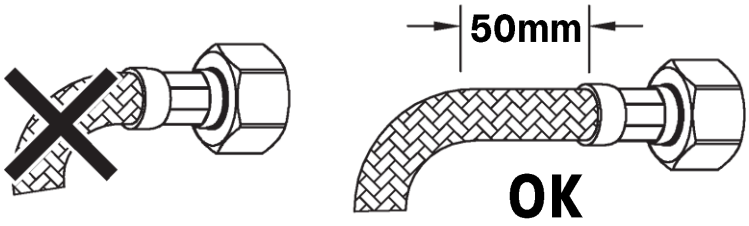

- Both ends of the hose must have a minimum **50mm** straight section before any bend.

Parts and Contents:

Key:	Description:	Qty:
A	Tap body	1
B	Base plinth	1
C	Upper seal	1
D	Fixing stud	1
E	White triangular stabiliser (for stainless steel sinks only)	1
F	Rubber gasket	1
G	Metal horseshoe	1
H	Fixing nut	1
I	Hot & cold flexi tails	2

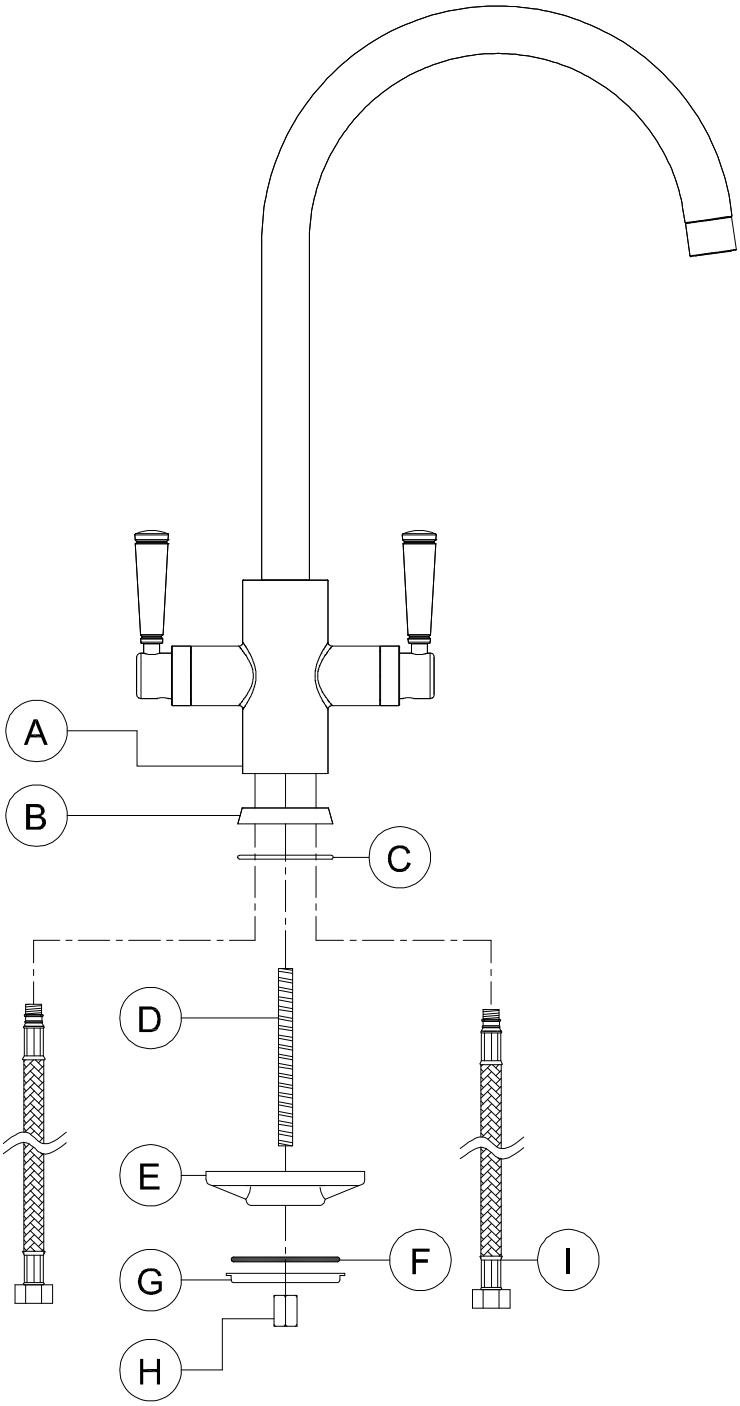

Installation:

1. Screw in the fixing stud (D) into the base of the tap (A).

2. Place the upper seal (C) into the base plinth (B) then place the base plinth (B) onto the bottom of the tap (A).

3. Screw the hot and cold flexi tail pipes (I) into the base of the tap body (A).

4. Place the mixertap (A) and base plinth (B) onto the sink or worktop and pass the tail pipes (I) and fixing stud (D) through the taphole. With the tap in place check that the flexi tail pipes (i) meet the hot and cold water feeds. If further adjustment to the plumbing is required do this now.

5. If fitting the tap to a stainless steel sink, the white triangular stabiliser (E) can be placed where shown to help to stabilise the weight of the tap.

6. Pass the rubber gasket (F) and then metal horseshoe (G) over the fixing stud (D) and around flexi tail pipes (I).

7. Fasten the fixing nut (H) securely onto the fixing stud (D) fixing the tap into its correct location.

8. Connect the hot & cold flexi water tail pipes (I) to the water supplies using ½" BSP x 15mm compression fittings or similar.

After installation:

- Leave the new tap open and ensure all other outlets are closed.
- Turn on the mains stopcock and water heating system, then restore the hot and cold supplies, this clears any debris not previously flushed.
- Check correct operation of hot, cold and mixed flow.
- Turn the tap off, dry any wet connections and inspect all connections for leaks.
- Check after 10 minutes to confirm no slow leaks are present.
- If available, pressure test to the maximum recommended pressure.
- Clean the tap and cover it until ready for use.
- Periodically check the installation for damage.
- If the property is left unattended for longer periods, isolate the water supplies.

This product is manufactured in accordance with recognised European standards. Please ensure that your Kitchen mixer is fitted in accordance with Local Water Byelaws. Where hot and cold water mix within the mixertap, then suitable non return (check) valves should be installed to the hot and cold supplies to prevent backflow.

Hot and cold supply pressures should be as closely balanced as possible for best results. Supply pipes should maintain the maximum diameter until immediately before the fitting. The differential between the hot and cold water supply temperatures should be sufficient to allow correct mixing function.

These installation guidelines have been prepared for your direction and you must exercise due care at all times. We do not accept responsibility for problems that may occur through improper installation. Whilst assembling the tap take care not to accidentally loosen any factory fixed assemblies.

This tap has been 100% assembly tested; therefore, you may expect a small residual amount of water to remain in the tap when delivered. Any water marks can be removed using the above care advice.

GARDA DUAL LEVER

TAP6140

HOWDENS

Info for the customer

Care Instructions for your tap:

Tuscan Bronze is regarded as a raw finish and is unlacquered. It has been brushed by hand, which gives it a matte appearance. Due to its reaction with the environment and daily use the products appearance will change over time turning lighter or darker in certain areas.

To maintain the appearance of this tap, ensure that it is regularly cleaned only using a clean, soft damp cloth and warm water. Dry the tap immediately after use and cleaning. To help preserve the original finish, apply a lighter layer of beeswax polish every 6-12 months.

DO NOT use:

- Abrasive or scouring cleaners
- Acidic cleaners
- Solvents (including acetone or chlorinated products)
- Harsh household chemicals (e.g. oven, drain or toilet cleaners, metal polishes)



If fitted, remove and clean the spout end aerator periodically to maintain flow performance.

Guarantee (UK only):

Your tap has the benefit of a comprehensive manufacturer's guarantee, details of which are shown on your Proof of Purchase Document. Any claim during the period of the guarantee must be accompanied by the Proof of Purchase. The product must be correctly installed and operated in accordance with the manufacturer's instructions and used for normal domestic purposes. This guarantee does not cover accidental damage, misuse or alterations which are likely to affect the product. The guarantee is invalid if the product is tampered with or repaired by any unauthorised person. The guarantee in no way affects your statutory or legal rights.