abode

Arkitect

Boiling Water Tap

Installation Guide



www.abodedesigns.co.uk

See top of boiler unit for contact details

ⓘ Please read these instructions carefully before installation or use and retain for future reference.

ⓘYou must install the tap and filter before the boiler.

We have a policy of continued product and quality development and improvement. Accordingly, we reserve the right to amend the specification at any time. All errors and omissions excepted.

ⓘ An information point or tip for installation or usage.	🛠 A service, maintenance or care consideration.	⚠ A technical or safety consideration or warning of hazardous situation with regard to life and property.

Using the product

Thank you for choosing this product. Reading this guide will ensure that the product is used safely and will give its best performance.

⚠ WARNING: THIS APPLIANCE CAN BE USED BY CHILDREN AGED FROM 8 YEARS AND ABOVE AND PERSONS WITH REDUCED PHYSICAL, SENSORY OR MENTAL CAPABILITIES OR LACK OF EXPERIENCE AND KNOWLEDGE ONLY IF THEY HAVE BEEN GIVEN SUPERVISION OR INSTRUCTION CONCERNING USE OF THE APPLIANCE IN A SAFE WAY AND HAVE UNDERSTOOD THE HAZARDS INVOLVED. CHILDREN SHALL NOT PLAY WITH THE APPLIANCE. CLEANING AND USER MAINTENANCE SHALL NOT BE MADE BY CHILDREN. ALL WIRING AND INSTALLATION MUST BE SUPERVISED BY A SUITABLY QUALIFIED PERSON.

⚠ Please also fully read and understand the boiler user instructions before use.

ⓘ It is normal for the hot water to take a moment to both dispense upon each use and stop fully after the handle is closed.

⚠ Do not add to, exchange or modify any component of the boiler or mixer tap, only genuine parts must be used. The spout exit or any part of the system must not include any additional third-party adaptors, components or connections that will add resistance or modify the system.

🛠 The installation should be periodically checked for damage, if the property is left unattended for a prolonged period, we recommend isolating water supplies and switching off the boiler at the mains socket. On reconnection flush thoroughly.

🛠 Clean the tap with a damp soft cloth and a mild dish soap to remove any grease marks created during installation as per the care instructions.

ⓘ Each time the product is used you should flush a small amount of boiled water through before use, typically this can be used to preheat your cup, if unused for extended periods then flush the product a longer time.

Your tap can dispense 3 types of water:

- Hot (boiled) filtered water Fully press the left side handle button down **(Fig. 1)** and then simultaneously turn the handle forwards no more than 90° **(Fig. 2)**. It is normal for the hot water to take a moment to start and stop dispensing as the water empties from the product after use.
- Hot & Cold (domestic) water - This is delivered when the right-side handle is tilted right **(Fig. 3)** to increase flow becoming warmer as the handle is rotated forwards.

⚠ Do not turn on the boiling handle at the same time as the standard hot and cold lever.

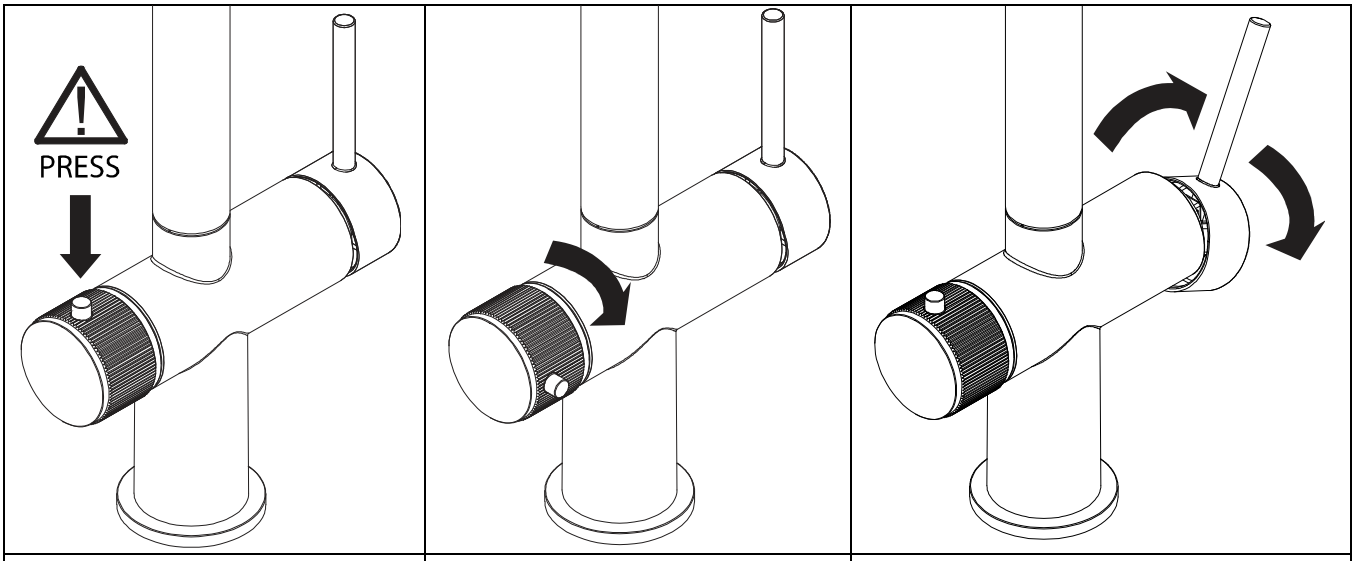

Fig 1. Fig 2. Fig 3.

Care instructions for your kitchen tap mixer

To maintain the appearance of this tap, ensure that it is regularly cleaned only using a clean, soft damp cloth. A solution of warm water and a mild liquid detergent may be used where necessary, and then the fitting rinsed thoroughly and wiped dry. Any other cleaning action will invalidate your warranty.

Abrasive cleaners, scouring cleaners and acidic cleaners must not be used under any circumstances. Avoid contact with all solvents (including chlorinated solvents, ketones or acetones as these may result in surface deterioration or etching). Also avoid contact with any harsh household chemicals such as oven cleaners, drain cleaners, rust removers, paint strippers and toilet bowl cleaners, bar keepers friend or Brasso.

The tap has a removable aerator on the spout exit, this can be removed and cleaned periodically to maintain optimum flow performance and remove any limescale, when reattaching please ensure to reconnect the center stem of the aerator to the center spout flexible tube fully.

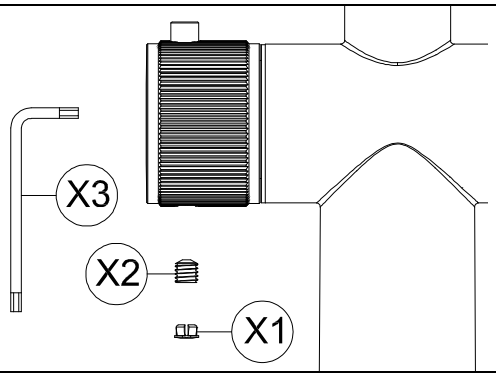

Hot handle maintenance:

This tap has a safety mechanism to lock the handle in the upright position. If adjustment is required over time, follow the steps below:

1. Remove dust cap (X1) from the underside of hot handle.
2. Using supplied 2.5mm A/F Allen key (X3) tighten grub screw (X2).

Tap Warranty Terms and Conditions

All Abode products are made using the highest quality materials and components, to ensure that they meet or exceed all UK or European Standards.
All products are thoroughly tested, and quality checked.
All products are backed with a comprehensive warranty and we are confident that they will give many years of trouble-free service.

The warranty applies to products used for normal domestic purposes and where the installation, care and maintenance instructions have been observed.
The warranty extends to the original purchaser only.

Details of Warranty duration and Terms & Conditions for each product type can be found on our website (www.abodedesigns.co.uk).

Marks, scuffs and scratches caused by improper installation or accidental damage are not covered by this guarantee. Neither are shade variations or any damage or defect caused by incorrect installation or abuse of the fitting.

As we are continuously improving and developing our range of products, finishes & colours, in the event of a valid claim, we may not be able to provide an identical replacement for the defective product throughout the guarantee period. Where an identical product is no longer available, we will supply the nearest equivalent from our then current product range. In assessing your claim, we must be given the opportunity to inspect the product as installed prior to removal. Any product returns must be packaged as received and complete.

No other warranties, express or implied, are made, including merchantability or fitness for a particular purpose. Under no circumstances shall the manufacturer be liable for any loss or damage arising from the purchase, use or inability to use this product, or for any special, indirect, incidental or consequential damages. No liability is accepted for consequential damage to other household fixtures, fittings or furnishings arising from this claim, even if attached to the product. No installer, dealer, agent or employee of Norcros Group (Holdings) Ltd. has the authority to modify the obligations or limitations of this warranty.

Tap installation

Important Technical Data

Min operating pressure (hot): 0.75 bar	Min operating pressure (cold): 1.5 bar
Min operating pressure Flow Limited (hot): 2.0 bar	Min operating pressure Flow Limited (cold): 2.0 bar
Max operating pressure: 5.5 bar*	Max domestic hot water temperature: 60°C*
Flow characteristics: Domestic Hot & Cold share outer single flow spout. Boiled filtered water: Through centre spout channel.	Recommended domestic hot water Temperature: 46°C

Flow rate Graph

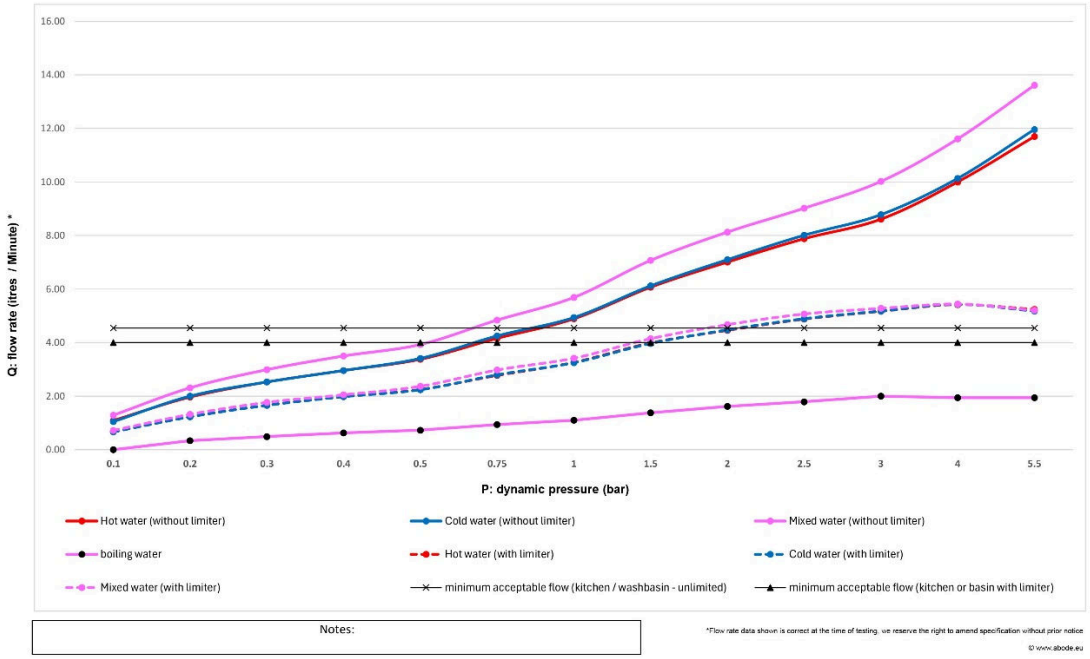

Notes:

*Flow rate data shown is correct at the time of testing. we reserve the right to amend specification without prior notice

© www.abode.eu

⚠ *If these temperatures or pressures are exceeded, even for short periods, damage can result. In these instances, a thermostatic mixing or pressure reducing valve should be installed.

⚠ This product is manufactured in accordance with recognised European standards. Please ensure that your kitchen mixer is fitted in accordance with Local Water Byelaws. **Where hot and cold water mix within the tap, then suitable non return (check) valves should be installed to both the hot and cold supplies to prevent backflow**.

ⓘ Hot and cold supply pressures should be as closely balanced as possible for best results. Supply pipes should maintain the maximum diameter until immediately before the fitting. The differential between the hot and cold water supply temperatures should be sufficient to allow correct mixing function.

⚠ These installation guidelines have been prepared for your direction and you must exercise due care at all times. We do not accept responsibility for problems that may occur through improper installation. Whilst assembling the tap take care not to accidentally loosen any factory fixed assemblies.

This tap has been 100% assembly tested; therefore you may expect a small residual amount of water to remain in the tap when delivered. Any water marks can be removed using the care advice.

Installation Preparation

⚠You must install the mixertap and filter before the boiler.

⚠ Before installing the new mixer it is essential that you thoroughly **flush through the supply pipes** in order to remove any remaining solder, swarf or impurities from your system. Failure to carry out this simple procedure could cause problems or damage to the workings of the mixertap or boiler.

🛠We recommend installing particle filters (not shown) and isolation valves (**B6**) to both the hot and cold feed pipes in an accessible position. This will help to prevent premature failure of the valves and ease any future maintenance.

⚠ Ensure you have suitable domestic hot and cold water pressure before installing this product (see Important Technical Data).

ⓘ All parts should be removed from their packaging and inspected for any transport damage and completeness prior to installation.

ⓘ Loosely position the tap, pipes and other principal supply components to check if any alterations to the existing supply pipework is required, if this is the case do this now.

⚠ Shut off your water heating system and ensure that your mains stopcock is closed. Open the lowest hot and cold taps in the house and allow the water to run until fully stopped.

If replacing an existing tap, remove the tap & clean the end of the feed pipes using wire wool, the tap hole area should be free from dirt and sealant.

ⓘ **This tap is designed to be installed in a worktop with a maximum thickness of 50mm.**

Parts and Contents

Key	Description	Qty
A1	Mixer tap	1
A2	Base plinth	1
A3	Base plinth seal	1
A4	Sink or worktop (max. 50mm)	0
A5	Fixing tube	1
A6	White triangular plate (for use with steel sinks only)	1
A7	Lower gasket	1
A8	Fixing washer	1
A9	Fixing flange nut	1
B1	Domestic hot in (from mains feed) red banded flexible hose M8 x ½"BSPF	1
B2	Domestic cold in (from mains feed) blue banded flexible hose M8 x ½" BSPF	1
B6	15mm isolation valve	0
C1	Cold out (from tap to filter) flexible hose (M8 x 3/8"F)	1
C2	14mm Ø fibre washer	1
C3	3/8" M x ¼"F brass adaptor	1
C4	¼" NPT M x ¼" pushfit	1
C5	¼" outside diameter plastic pipe	1**
C6	Filter bracket screw	1
C7	Filter bracket	1
C8	Filter cartridge	1
C9	¼" outside diameter plastic pipe (cut from C5)	1**
D1	Boiling hot water (from boiler to tap) "110°" red labelled flexible hose. M8 x 3/8"F	1
D2	3/8" fibre seal	1

****Part supplied with boiler pack, cut to required lengths to and from filter and boiler. For the boiler parts list and connections please refer to the instructions supplied with the boiler for more detail.**
Note: These parts should be made as short as is practical.

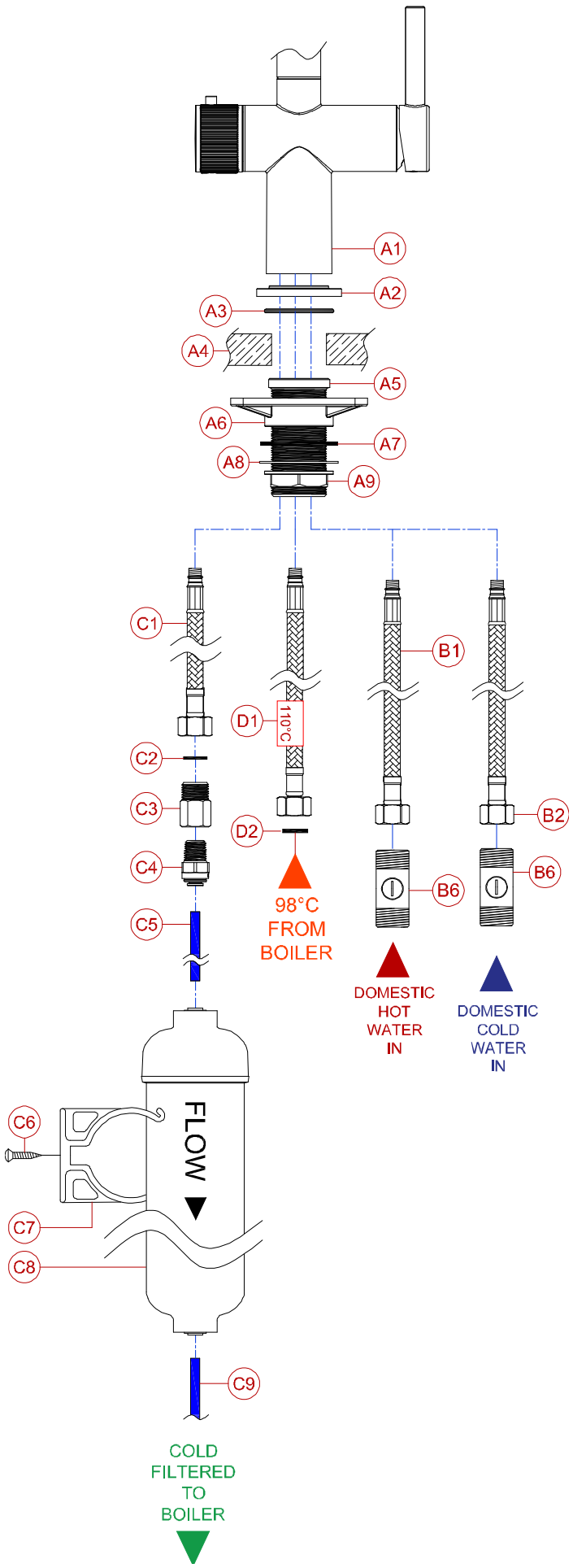

Install the tap:

This diagram shows the view of the base of the tap (A1) with the 98°C water handle to the left of the body.

⚠ YOU MUST CAREFULLY RESPECT THE INLETS AND OUTLETS AS SHOWN

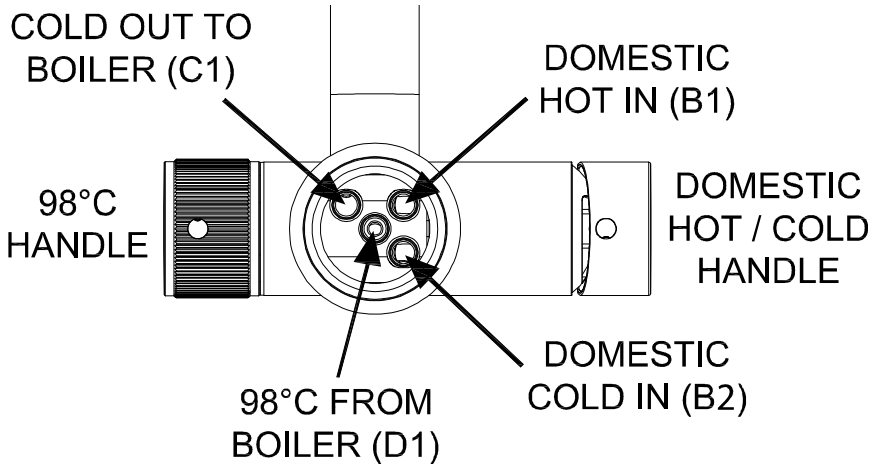

Install the tap:

1. Place the upper seal (A3) into base plinth (A2) if not already pre-fitted.
2. Hand tighten the hot and cold flexi tail pipes (B1 & B2), boiler flexi tail hose (D1) and cold outlet flexi tail hose (C1) into the base of tap (A1) as shown in the diagram above.
3. Pass the hot and cold flexi tail pipes (B1 & B2), boiler flexi tail hose (D1) and cold outlet flexi tail hose (C1) through fixing tube (A5) in that specific order. Once all tails have been passed through screw fixing tube (A5) to underside of tap body (A1).
4. Pass the hot and cold flexi tail pipes (B1 & B2), boiler flexi tail hose (D1) and cold outlet flexi tail hose (C1) through base plinth (A2) in that specific order. Then pass base plinth (A2) over fixing tube (A5) so that it is flush to the underside of tap body (A1).
5. Place the tap (A1-A3) centrally and straight onto the sink/worktop, passing the fixing tube (A5), flexi hoses (B1, B2, C1 & D1) through the tap hole.
6. Pass the lower gasket (A7) then the fixing washer (A8) over the fixing tube (A5). Note: only if the tap is to be fitted to a stainless steel sink, then the white triangular plate (A6) can be fitted where shown to improve the stability of the tap.
7. Fasten fixing flange nut (A9) securely onto the fixing tube (A5) to fix the tap (A1) into its correct location.
8. Screw pushfit (C4) into brass adaptor (C3).

⚠ We recommend using PTFE tape (do not use sealing compound) on the thread of the pushfit fittings to make a good seal without applying excessive force (which may damage the plastic pushfit if overtightened).

9. Screw pushfit (C4) and adaptor (C3) into the cold out flexible hose (C1) ensuring fibre washer (C2) is in place.
10. Connect the domestic hot water flexible hose (B1) to the hot water isolation valve (B6).
11. Connect the domestic cold water flexible hose (B2) to the cold water isolation valve (B6) using a section of 15mm pipe (B5) and compression nut (B4) and olive (B3). Note: Parts (B3, B4, B5 & B6) are not supplied.

⚠ If your customer has a water softener installed you must attach cold water flexible hose (B2) to an unsoftened cold water source.

Install the 5 lpm Limiter:

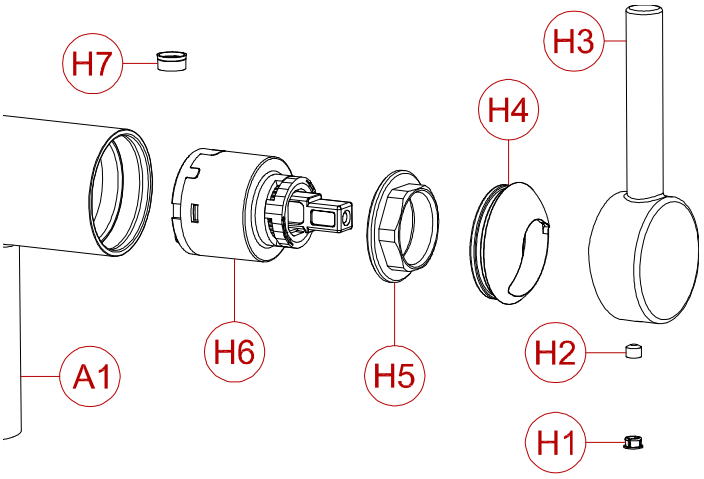

Note: This process can be done before or after installation

1. Unpick dust cap (**H1**) and remove handle (**H3**) by loosening grub screw (**H2**) using 2.5mm Allen key which is included
2. Remove decorative cover (**H4**).
3. Using a 27mm socket unscrew valve cover (**H5**) and remove valve (**H6**).
4. Push flow limiter (**H7**) into the central allocated hole in the valve chamber on body (**A1**).

   ⓘ **Note black rubber ring inside flow limiter (H7) must be facing outwards when inserted.**
5. Reassemble tap in reverse order, ensure (**H5**) is tightened fully.

🛠 THE LIMITER MAY NEED PERIODIC CLEANING OR REPLACEMENT

Install the Filter:

1. Find a suitable place to mount the filter cartridge (**C8**) under the sink, **it must be mounted vertically**, easily accessible (to be changed periodically), away from any heat source or electrical connections and close enough not to exceed the available length of the ¼" plastic pipe (**C5**, **C9**) supplied to reach between the tap, filter and boiler (place the boiler temporarily to help judge the required lengths of ¼" plastic pipe).
2. Using the self-tapping screw (**C6**) securely fix the filter bracket (**C7**) to the cabinet wall.
3. 🛠 Write the installation date onto the filter label in permanent pen.
4. Clip the filter cartridge (**C8**) into the bracket (**C7**) as shown.

   ⓘ You must respect the direction of flow as indicated on the filter cartridge (**C8**).
5. Measure and then cut required length of ¼" pipe (**C5**) to connect pushfit (**C4**) to the filter cartridge (**C8**) inlet, allow a small amount of extra length to make it easier to change the filter.
6. Firmly push connect the ¼" pipe (**C5**) between pushfit (**C4**) and filter cartridge inlet (**C8**).
7. Firmly push connect the remaining ¼" pipe (**C9**) into the filter cartridge outlet (**C8**).

Note: Parts (C5 & C9) should be made as short as is practical.

After Installation:

1. Reconnect the domestic hot and cold water supplies and open hot and cold isolation valves (B6). As the system starts to refill, check carefully all new water connections for leaks. After the product installation is complete we recommend you recheck for any slower leaks.

2. ⚠ It is normal for new filter cartridges to lose a small amount of loose carbon when first used and will dissipate with flushing, whilst harmless to consume if the carbon particles are not flushed prior to connection to the boiler they may partly block the boiler and reduce the flow rate. You must flush the filter for at least 2 litres with cold water or until the water become clear (without black carbon particles).

3. Place the ¼" pipe (C9) from the filter cartridge (C8) outlet into a bowl or bucket.

4. Turn on the 98°C forwards 90° handle fully, keep the lever open until all air is expelled and cold (filtered) water exits the ¼" pipe (C8) into the bowl, flush a minimum of a further 2 litres of cold (filtered) water through the ¼" pipe (C8). You may notice a discolouration to the water at first, this is loose carbon particles from the filter it is normal, harmless and will pass with flushing. Continue to flush the filter until the water runs clear. Once complete turn off the 98°C handle.

5. Please refer to 'PROBOIL.3X User & Installation Guide' for the next steps on how to install the boiler and connect the tap and filter.

Please leave these instructions for your customer