PROFILE & **PRO**JECT

Installation Guide





www.proboil.co.uk
See top of boiler for contact details

ⓘ Please read these instructions carefully before installation or use and retain for future reference.

ⓘYou must install the tap and filter before the boiler.

We have a policy of continued product and quality development and improvement.

Accordingly we reserve the right to amend the specification at any time. All errors and omissions excepted.

ⓘ An information point or tip for installation or usage.	A service, maintenance or care consideration.	⚠ A technical or safety consideration or warning of hazardous situation with regard to life and property.

Using the product

Thank you for choosing this product. Reading this guide will ensure that the product is used safely and will give its best performance.

⚠ WARNING: THIS APPLIANCE CAN BE USED BY CHILDREN AGED FROM 8 YEARS AND ABOVE AND PERSONS WITH REDUCED PHYSICAL, SENSORY OR MENTAL CAPABILITIES OR LACK OF EXPERIENCE AND KNOWLEDGE ONLY IF THEY HAVE BEEN GIVEN SUPERVISION OR INSTRUCTION CONCERNING USE OF THE APPLIANCE IN A SAFE WAY AND HAVE UNDERSTOOD THE HAZARDS INVOLVED. CHILDREN SHALL NOT PLAY WITH THE APPLIANCE. CLEANING AND USER MAINTENANCE SHALL NOT BE MADE BY CHILDREN. ALL WIRING AND INSTALLATION MUST BE SUPERVISED BY A SUITABLY QUALIFIED PERSON.

⚠ Please also fully read and understand the boiler user instructions before use.

ⓘ It is normal for the hot water to take a moment to both dispense upon each use and stop fully after the hotkey™ is used water remains within the product.

ⓘ Removing and storing the hotkey™ allows you to disable the 98°C function of this tap, if all persons in the house understand the safe use of the product then hotkey™ can be stored at the rear of the body of the tap when not in use.

⚠ Do not add to, exchange or modify any component of the boiler or mixer tap, only genuine parts must be used. The spout exit or any part of the system must not include any additional third-party adaptors, components or connections that will add resistance or modify the system.

🛠 The installation should be periodically checked for damage, if the property is left unattended for a prolonged period we recommend isolating water supplies and switching off the boiler at the mains socket. On reconnection flush thoroughly.

🛠 Clean the tap with a damp soft cloth and a mild dish soap to remove any grease marks created during installation as per the care instructions.

ⓘ Each time the product is used you should flush a small amount of boiled water through before use, typically this can be used to preheat your cup, if unused for extended periods then flush the product a longer time.

Your tap can dispense 4 types of water:

- Hot (domestic) water – This is delivered when the left side handle is rotated forwards up to a maximum of 90° for full flow.
- Cold (domestic) water – This is delivered when the right side handle is rotated forwards up to a maximum of 90° for full flow.
- Cold (filtered) water – This is delivered when the left side handle is rotated backwards up to a maximum of 90° at approximately 45° the flow rate is nearly full, filtered flow rate can be adjusted at the three way tee.

- **Hot (boiled & filtered) water** - This is delivered when the hotkey™ is placed or rested near the bottom of the body of the tap, the key should be placed or held near the symbol. For two hands free use (for example when filling a pan) the hotkey™ can be rested against the front of the tap.

  Please refer to the PROBOIL4E user guide for more information on best and safe use advice.

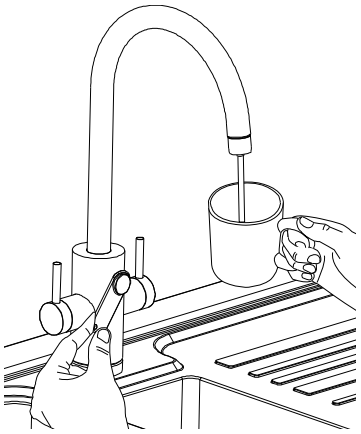

Care instructions for your kitchen tap mixer

To maintain the appearance of this tap, ensure that it is regularly cleaned only using a clean, soft damp cloth. A solution of warm water and a mild liquid detergent may be used where necessary, and then the fitting rinsed thoroughly and wiped dry. Any other cleaning action will invalidate your warranty.

Abrasive cleaners, scouring cleaners and acidic cleaners **must not be used** under any circumstances. Avoid contact with all solvents (including chlorinated solvents, ketones or acetones as these may result in surface deterioration or etching). Also avoid contact with any harsh household chemicals such as oven cleaners, drain cleaners, rust removers, paint strippers and toilet bowl cleaners, bar keepers friend or Brasso.

Where the tap has a removable aerator on the spout exit it can be removed and cleaned periodically to maintain optimum flow performance and remove any limescale, when reattaching please **ensure to reconnect the center stem of the aerator to the center spout flexible tube fully**.

Tap Warranty Terms and Conditions

In the unlikely event that you should experience any defect in the materials or workmanship of your new Abode mixer within 5 years of purchase, the purchaser's sole remedy shall be the replacement (at the manufacturer's discretion) of all or any part of the product that is defective. All working parts and valves are guaranteed for a period of 5 years from purchase. Decorative surface finishes and O-rings are guaranteed for 1 year from the date of purchase provided that our advice concerning care has been observed and no scouring agents have been used. This is provided that the mixer or tap has been used for normal domestic purposes and that the care, installation and maintenance instructions have been observed. The warranty extends to the original purchaser only.

Marks, scuffs and scratches caused by improper installation or accidental damage are not covered by this guarantee. Neither are shade variations or any damage or defect caused by incorrect installation or abuse of the fitting.

As we are continuously improving and developing our range of products, finishes & colours, in the event of a valid claim, we may not be able to provide an identical replacement for the defective product throughout the guarantee period. Where an identical product is no longer available, we will supply the nearest equivalent from our then current product range. In assessing your claim, we must be given the opportunity to inspect the product as installed prior to removal. Any product returns must be packaged as received and complete.

No other warranties, express or implied, are made, including merchantability or fitness for a particular purpose. Under no circumstances shall the manufacturer be liable for any loss or damage arising from the purchase, use or

inability to use this product, or for any special, indirect, incidental or consequential damages. No liability is accepted for consequential damage to other household fixtures, fittings or furnishings arising from this claim, even if attached to the product. No installer, dealer, agent or employee of Norcros Group (Holdings) Ltd. has the authority to modify the obligations or limitations of this warranty.

Tap installation

Important Technical Data

Minimum operating pressure (hot): 0.5 bar	Minimum operating pressure (cold): 2.0 bar
Maximum operating pressure: 5.5 bar*	Maximum domestic hot water temperature: 60°C*
Flow characteristics: Domestic Hot, Cold & filtered cold share outer single flow spout. Boiled filtered water: Through centre spout channel.	Recommended domestic hot water Temperature: 46°C

⚠*If these temperatures or pressures are exceeded, even for short periods, damage can result. In these instances, a thermostatic mixing or pressure reducing valve should be installed.

⚠ This product is manufactured in accordance with recognised European standards. Please ensure that your kitchen mixer is fitted in accordance with Local Water Byelaws. **Where hot and cold water mix within the tap, then suitable non return (check) valves should be installed to both the hot and cold supplies to prevent backflow**, a preinstalled non return valve on the hot &cold supply flexi hose (J & K) is already supplied (see instructions key).

ⓘ Hot and cold supply pressures should be as closely balanced as possible for best results. Supply pipes should maintain the maximum diameter until immediately before the fitting. The differential between the hot and cold water supply

temperatures should be sufficient to allow correct mixing function.

⚠These installation guidelines have been prepared for your direction and you must exercise due care at all times. We do not accept responsibility for problems that may occur through improper installation. Whilst assembling the tap take care not to accidentally loosen any factory fixed assemblies.

This tap has been 100% assembly tested; therefore you may expect a small residual amount of water to remain in the tap when delivered. Any water marks can be removed using the care advice.

Installation Preparation

⚠You must install the mixertap and filter before the boiler.

⚠ Before installing the new mixer it is essential that you thoroughly **flush through the supply pipes** in order to remove any remaining solder, swarf or impurities from your system. Failure to carry out this simple procedure could cause problems or damage to the workings of the mixertap or boiler.

🛠We recommend installing particle filters (not shown) and isolation valves (B5) to both the hot and cold feed pipes in an accessible position. This will help to prevent premature failure of the valves and ease any future maintenance.

⚠ Ensure you have suitable domestic hot and cold water pressure before installing this product (see technical data).

ⓘ All parts should be removed from their packaging and inspected for any transport damage and completeness prior to installation.

ⓘ Loosely position the tap, pipes and other principal supply components to check if any alterations to the existing supply pipework is required, if this is the case do this now.

⚠ Shut off your water heating system and ensure that your mains stopcock is closed. Open the lowest hot and cold taps in the house and allow the water to run until fully stopped.

If replacing an existing tap, remove the tap & clean the end of the feed pipes using wire wool, the tap hole area should be free from dirt and sealant. This mixertap requires a Ø35mm tap hole.

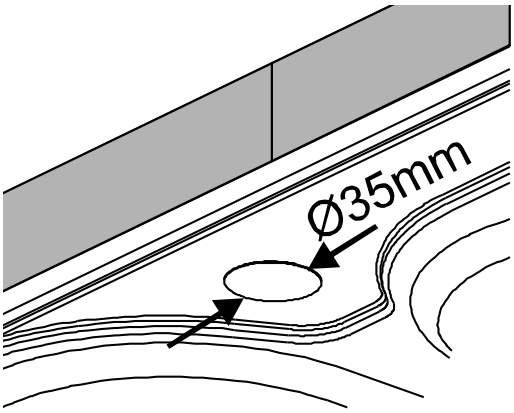

ⓘ This tap is designed to be installed in a worktop with a maximum thickness of 50mm.

ⓘ This tap requires a recommended minimum distance of 60mm from the tap hole centre to any rear wall or backsplash to allow the filtered water handle to rotate backwards..

⚠ Correct use of flexible hose connectors

This product is supplied with flexible hose connections for ease of fitting, failure to observe these standard installation guidelines will invalidate the warranty for your product.

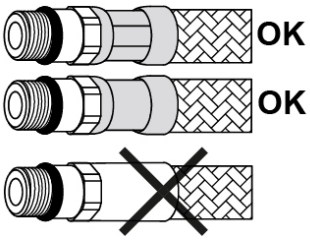

- Before assembling the hose to the product ensure the hose has been crimped (as highlighted) on both ends of the hose after the braided casing.

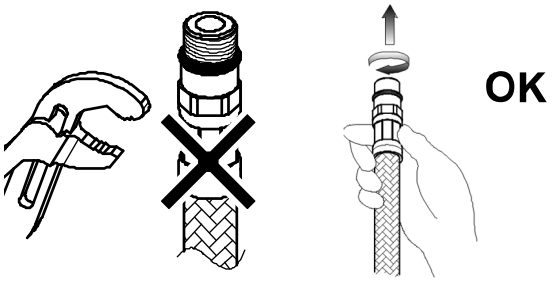

- Always screw the flexi hoses into the product only by hand until feeling mechanical rest, a spanner must not be used on the product connecting end of the hose.
- Always use the pipes provided.

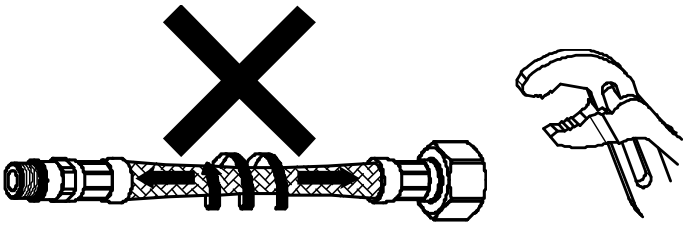

- Never twist or stretch the flexible hose during installation.
- Do not overtighten the hexagonal end of the hose when using a spanner causing the hose to twist.

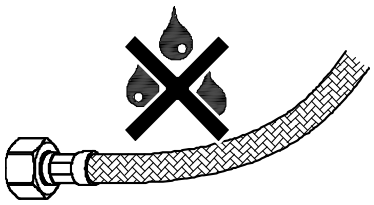

- The braiding on the flexible hose must not be in contact with any scarcely aggressive chemicals, internal or external room walls or dissimilar metals or materials.

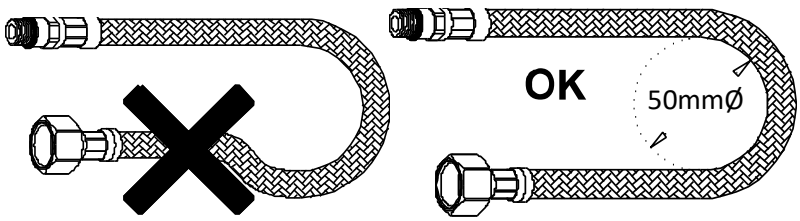

- Observe the minimum bend radius of 50mm, hoses must not be kinked or looped.
- Hoses must not be double bent in multiple directions.

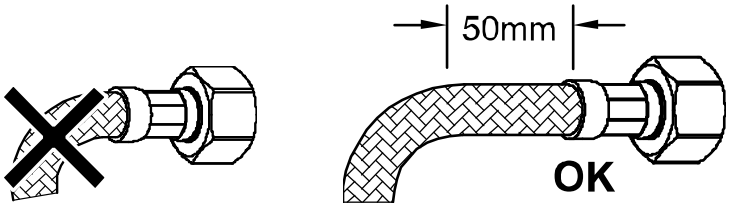

- Both ends of the hose must have a minimum 50mm straight section before any bend.

Parts and Contents

Key	Description	Qty
A	Mixer tap	1
B	Upper seal	1
C	White triangular plate (for steel sinks only)	1
D	Lower gasket	1
E	Metal horseshoe	1
F	Hollow fixing stud	1
G	Fixing nut	1
H	10mm Fibre seal	1
I (X1)	Filtered water adaptor nut	1
J (X2)	Hot flexi tail	1
K (X3)	Cold flexi tail	1
L	NRV (hot) (pre-installed)	1
M	NRV (cold) (pre-installed)	1
N (X4)	Boiler data connection	1
O (X5)	Boiler flexi tail (marked 110°C)	1
P	14mm Fibre seal	1
N/A	'Hotkey' (not shown)	2

⚠ YOU MUST CAREFULLY RESPECT THE INLETS AND OUTLETS AS SHOWN IN FIG 1.

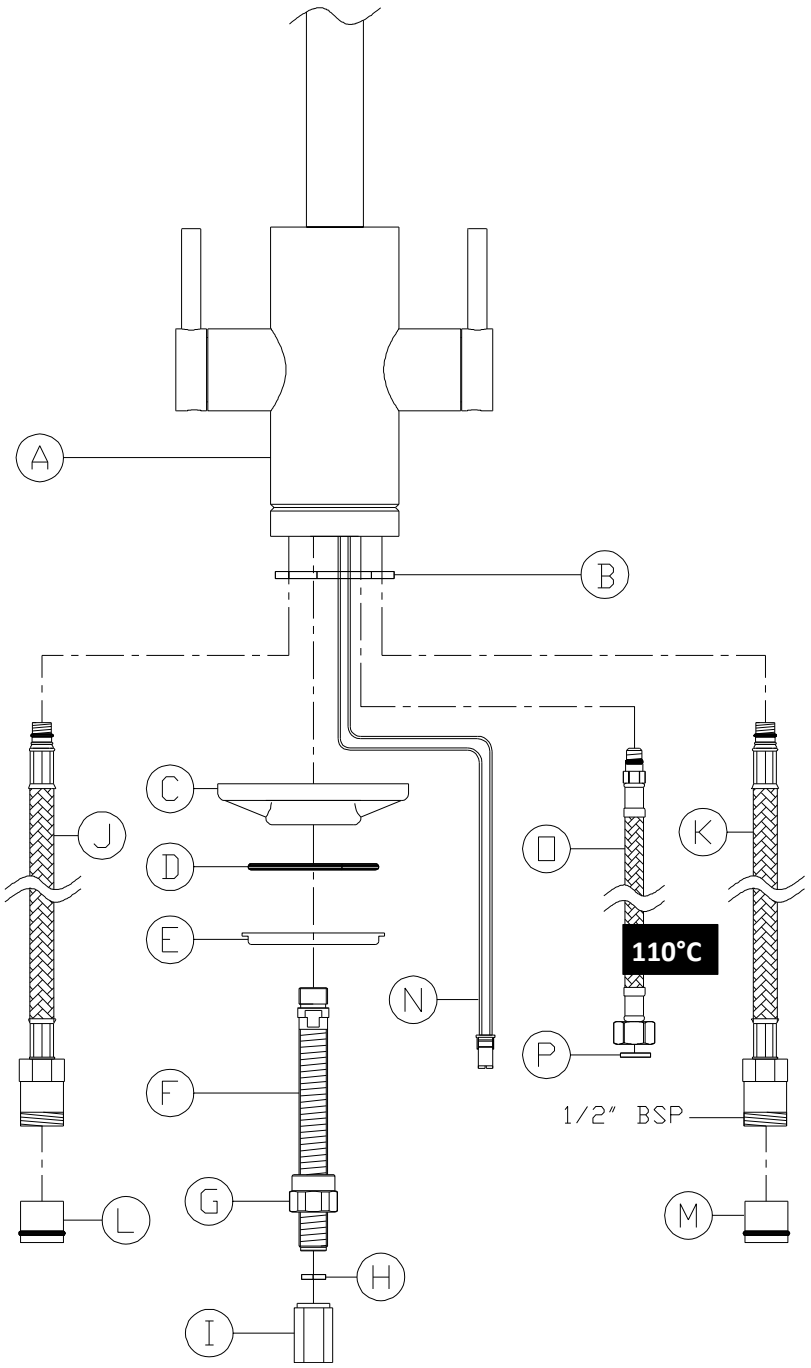

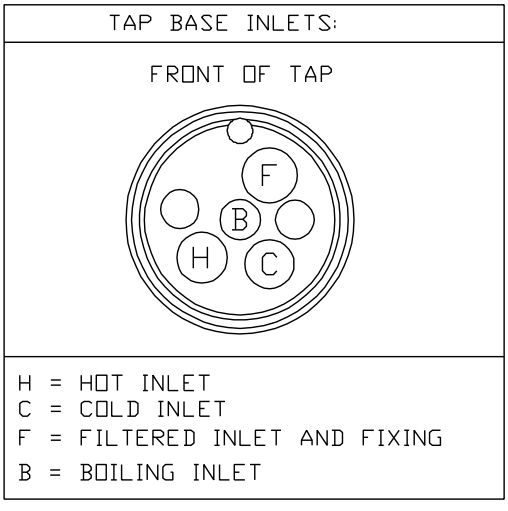

fig. 1

Install the tap:

1. Screw the hollow fixing stud (F) into the base on the tap using a spanner or 6mm Allen key. Note: the drawing identifies water inlets.

2. Screw the hot and cold flexi tails (J & K) into the base of the tap (A). Hand tighten fully only.

3. Screw boiler flexi tail (O) into base of tap (A). Hand tighten fully only.

4. Place the upper seal (B) on to the base of the tap (A).

5. Place the tap (A) centrally and straight to the tap hole, passing the hollow fixing stud (F), tail pipes (J, K & O), and boiler data connection (N) through the sink.

⚠ **Take special care not to pull or trap data connection wire (N) between the tap body and the sink or worktop, a Velcro tie wrap is included with the boiler pack to secure the data connection wire and prevent it becoming accidently pulled.**

6. Pass the lower gasket (D) then the metal horseshoe (E) over the hollow fixing stud (F). Note: if the tap is to be fitted to a stainless steel sink then the white triangular plate (C) can be fitted where shown to improve the stability of the tap.

7. Using a spanner tighten fixing nut (G) onto the hollow fixing stud (F), a box spanner or small basin wrench will help if one is available.

8. Place fibre washer (H) into adaptor (I), tighten the adaptor (I) with its flats nearest to the tap onto the hollow fixing stud (F).

9. Leave hotkeys (Q) in their bags and safe for the customer to find after testing the Proboil installation.

After Installation

1. Clean the tap to remove any marks created during installation as instructed.

2. **Now please refer to 'PROBOIL.4E User & Installation Guide' for the next steps on how to install the boiler and connect the tap and filter.**

Please leave these instructions for your customer