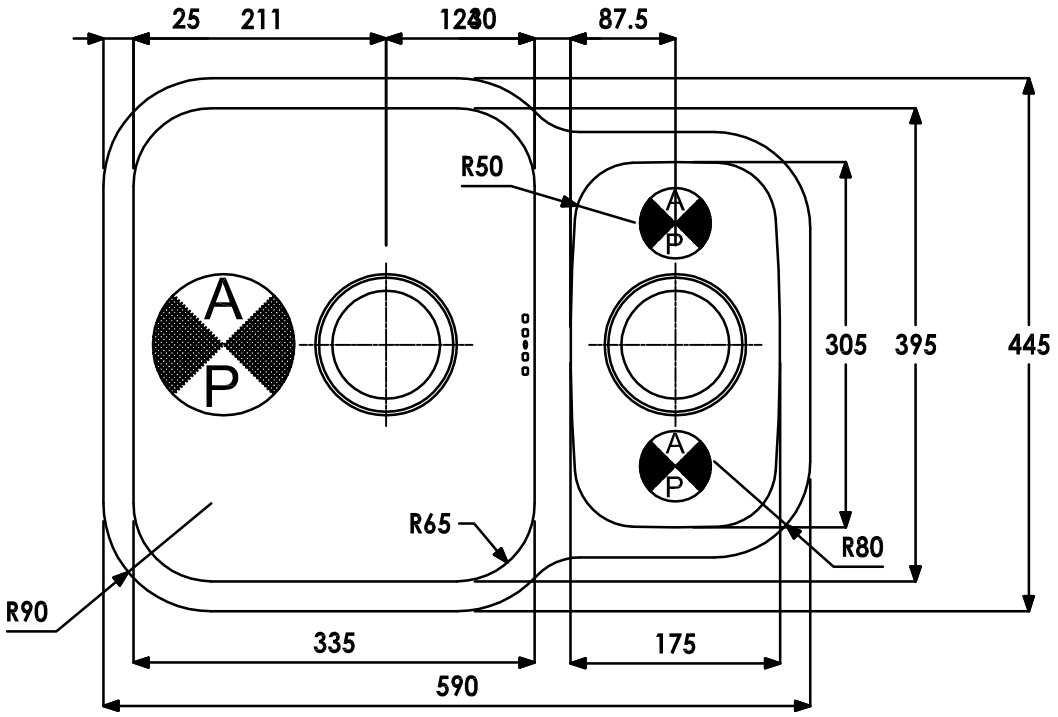
25
211
120
80
87.5
R50
A
P
305
395
445
R65
R80
R90
335
175
590

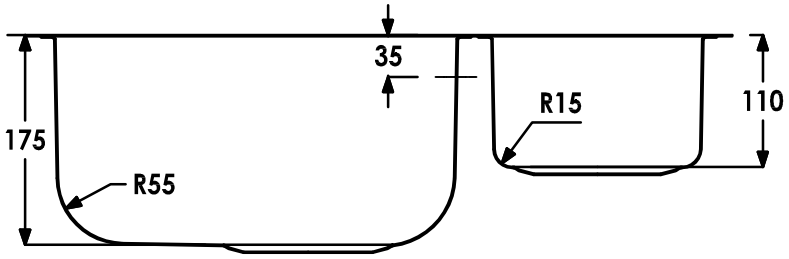
35
R15
110
175
R55

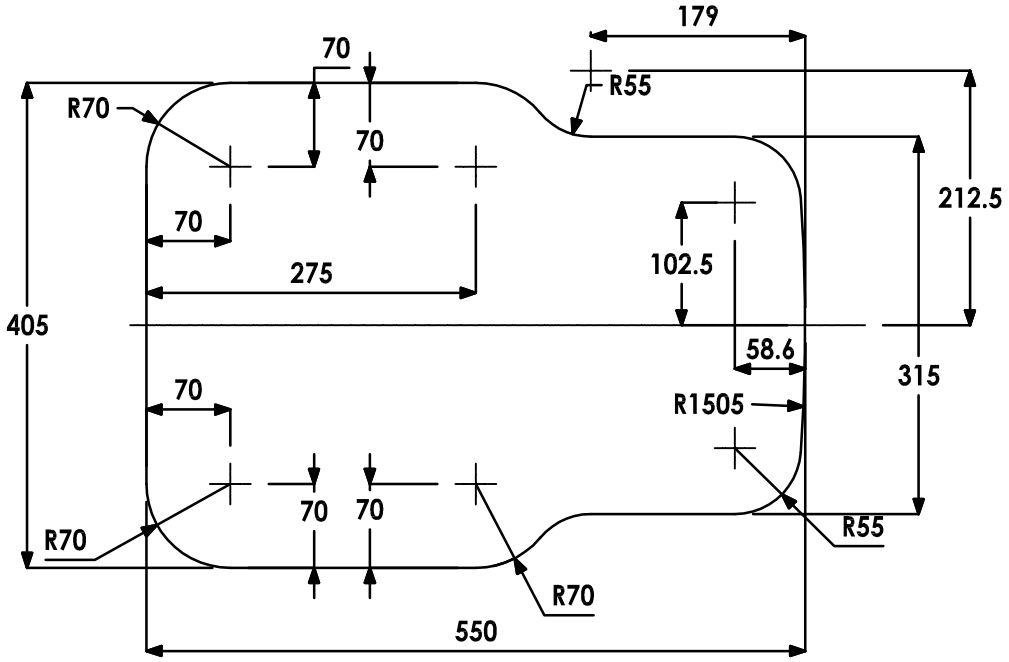
179
70
R55
R70
70
212.5
70
102.5
275
405
58.6
315
70
R1505
70
70
R55
R70
R70
550