PT3001-05 – Arkitekt Boiling Water Tap

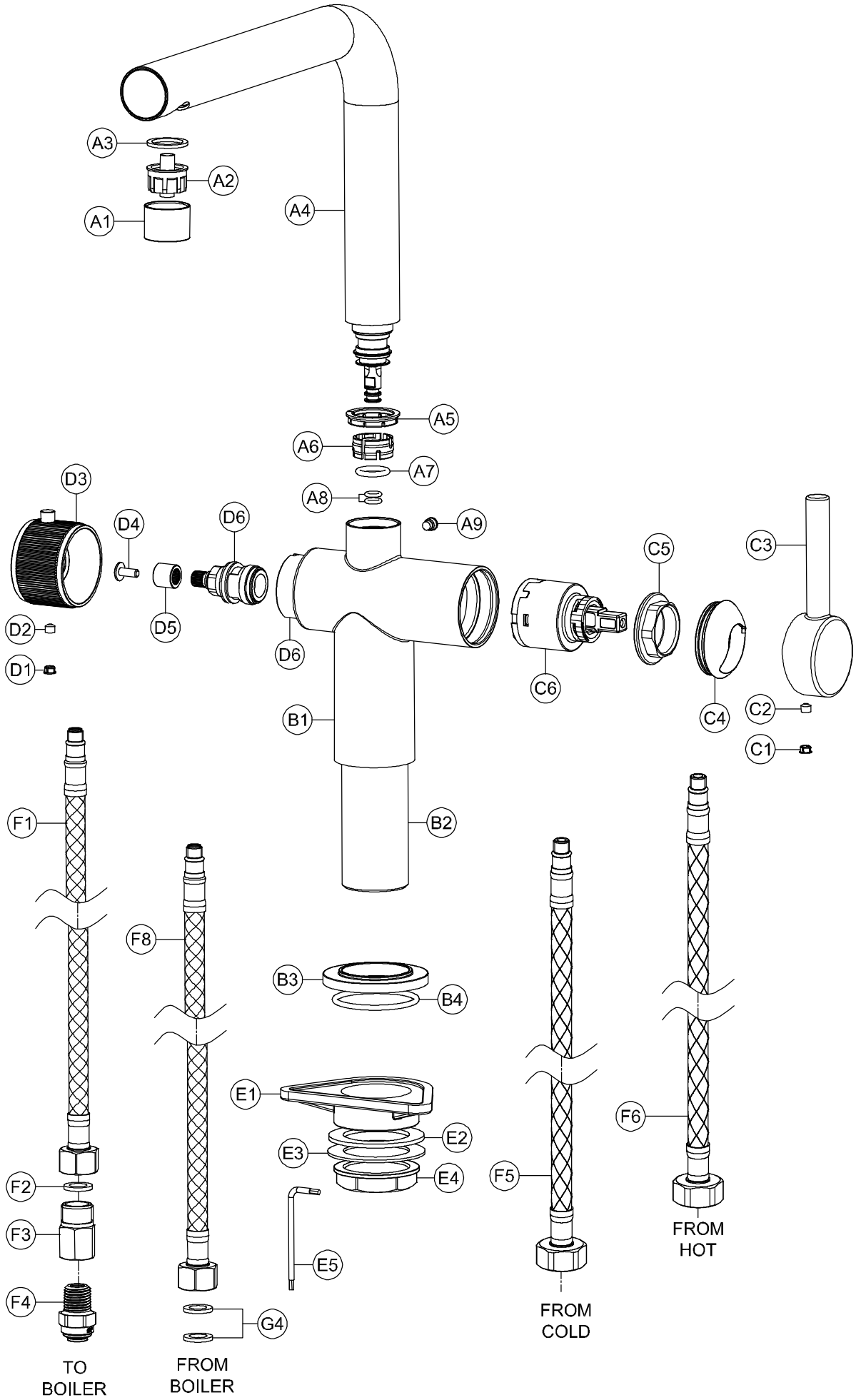

PT3001-05 – Arkitekt Boiling Water Tap

abode

General Advice:

- These instructions are intended as a guide only, if you are in any doubt, you should seek the advice of a qualified professional.
- Take care not to mark finished parts with screwdrivers or other tools.
- Use a pair of rubber gloves to get a better grip on decorative hand tight parts.
- Ensure all parts are reassembled tightly.
- After maintenance test that all assemblies are water tight and function correctly.
- Always isolate the hot, cold and boiling water and power supplies, before starting any maintenance allow the boiler to cool, once isolated you should drain any residual water from your system.

To replace the boiled water valve:

1. Remove dust cap (**D1**) and loosen grub screw (**D2**) on the underside of handle (**D3**) using a 2.5mm A/F Allen key.
2. Pull the handle (**D3**) horizontally away from the tap body (**B1**).
3. Using a screwdriver unscrew brass dome-head screw (**D4**) and pull bush (**D5**) horizontally off valve (**D6**).
4. Hold the body of the tap (**B1**) firmly. Using a 14mm socket remove valve (**D6**).
5. Clean the Inside of chamber of (**B1**) with a soft wet cloth.
6. Reassemble the tap in the reverse order ensuring that grub screw (**D2**) is fully tightened.

   Please Note: When placing the handle (**D3**) back onto the new valve (**D6**) make sure that the valve is in the off position and that the handle is vertically aligned with the spout (**A4**)**.**

To replace the cold valve:

1. Remove dust cap (**C1**) and loosen grub screw (**C2**) on the underside of handle (**C3**) using a 2.5 mm A/F Allen key.
2. Pull the handle (**C3**) horizontally away from the tap body (**B1**)
3. Pull the decorative cover (**C4**) horizontally away from tap body (**B1**)
4. With the tap (**B1**) fixed to the sink/base unit, using an adjustable spanner unscrew the valve lock nut (**C5**).
5. Clean the Inside of chamber (**B1**) with a soft wet cloth.
6. Replace the faulty valve (**C6**) with the new one and assemble in reverse order.

To replace the spout O-rings:

1. Loosen grub screw (**A9**) on the rear of body (**B1**) using a 3mm A/F Allen key.
2. Pull the spout (**A4**) vertically away from the body (**B1**).
3. Remove the three old O-rings (**A7** & **A8**) using a small screwdriver or similar.
4. If worn, remove the white PTFE ring (**A5** & **A6**) and replace.
5. Ensure the inside of the spout body chamber (**B1**) and the spout base (**A4**) is clean of dirt and grit with a soft wet cloth.
6. Carefully locate the three new O-rings (**A7** & **A8**) onto the spout base (**A4**).
7. Grease the O-rings (**A7** & **A8**) thoroughly with silicone or alternative similar grease.
8. Reassemble the tap in reverse order.

To replace/clean the spout aerator:

1. Unscrew aerator housing (**A1**).
2. Pull aerator (**A2**) vertically away from the inner brass tube connector located inside spout (**A4**).
3. If required replace aerator seal (**A3**).
4. Push the new aerator (**A2**) onto the connector located inside spout (**A4**).
5. Place aerator housing (**A1**) over aerator (**A2**) and screw back onto spout (**A4**).